WSB–440R LID TOP VIEW

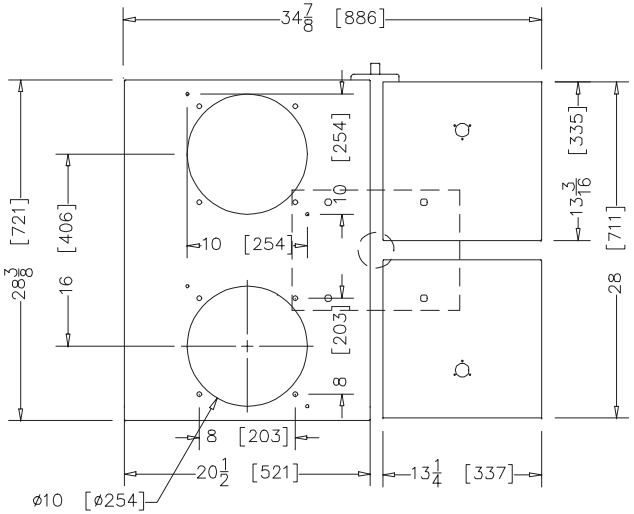

WSB–440R HOPPER TOP VIEW

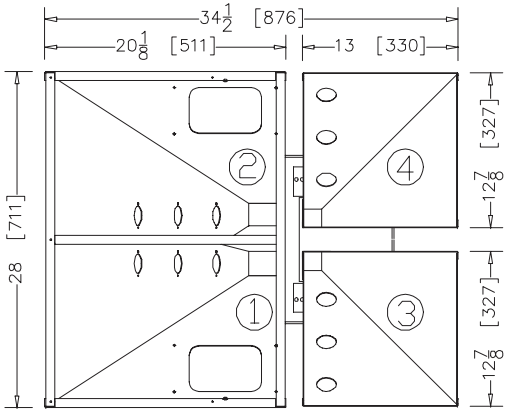

Compartments 1 & 2 are approx.
1.2 cu ft [34 Litres]

Compartments 3 & 4 are approx.
.5 cu ft [14 Litres]

WSB 440R FRONT VIEW

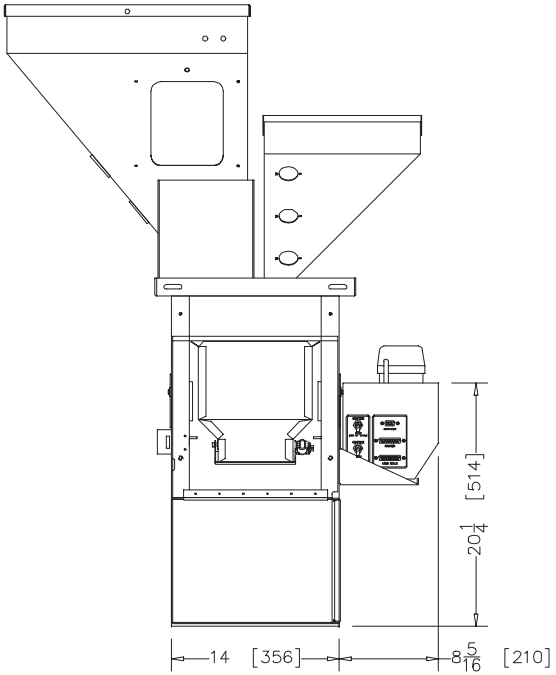

WSB 440R SIDE VIEW

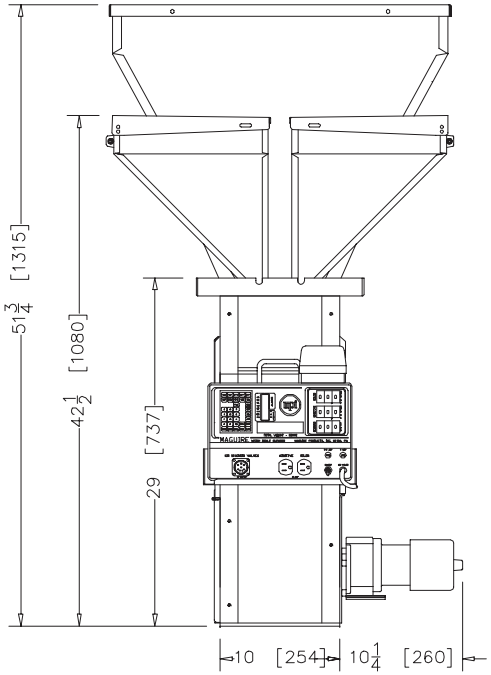

WSB 440R "FOOTPRINT"

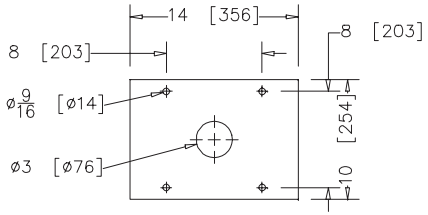

STD WSB BOTTOM PLATE
¼" [6.4] STEEL PLATE

All dimensions are in inches [millimeters]

MAGUIRE PRODUCTS, INC.
11 Crozerville Road, Aston, PA
Tel: (888) 459–2412
Fax: (610) 459–2700
http://www.maguire.com

Model WSB–440R Pictorial

DRAWN BY:	DATE DRAWN:
CGC	12/16/97
MAT'L:	FINISH: