WSB 960 HOPPER LID

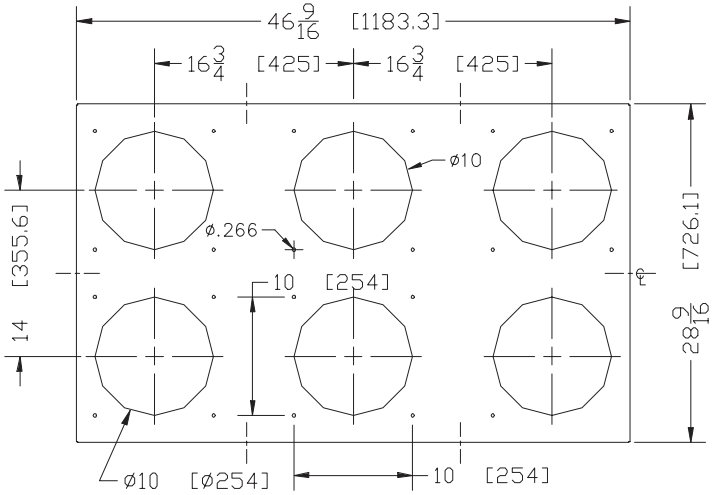

MODEL WSB-960
* COMPARTMENTS 1, 3, 4, & 8 – 1.5 cu. ft. [42 Liters]
* COMPARTMENTS 2 & 7 – 1 cu. ft. [28 Liters]
(COMPARTMENTS 5 & 6 RESERVED FOR ADDITIVE FEEDERS)

WSB 960 HOPPER-TOP VIEW

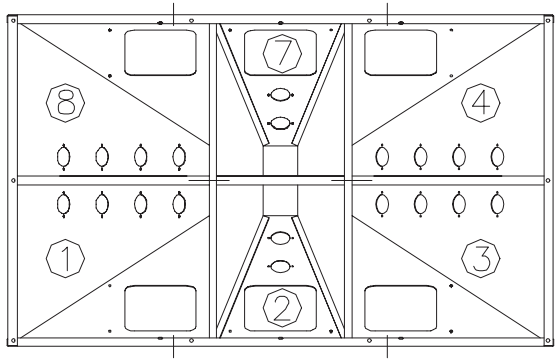

WSB 960 FRONT VIEW

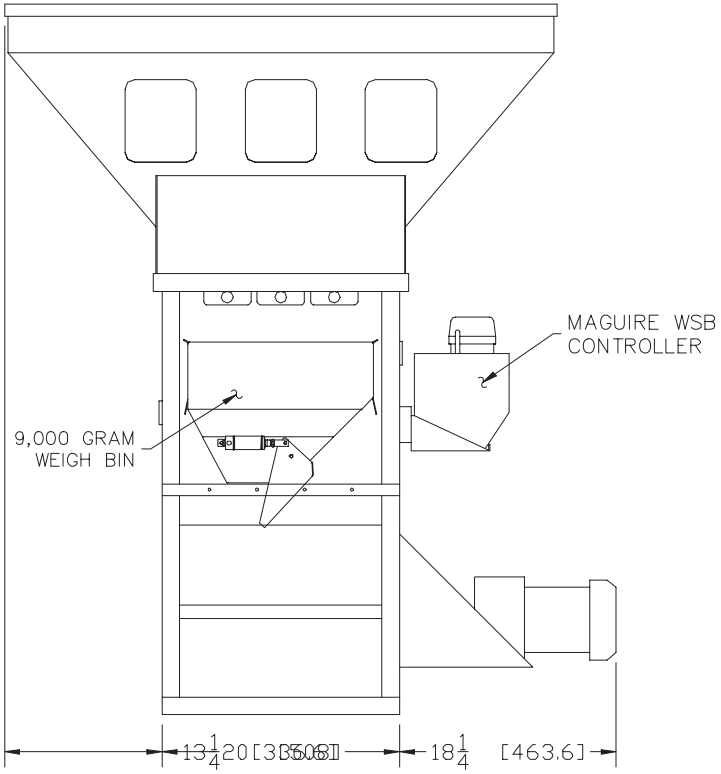

WSB 960 SIDE VIEW

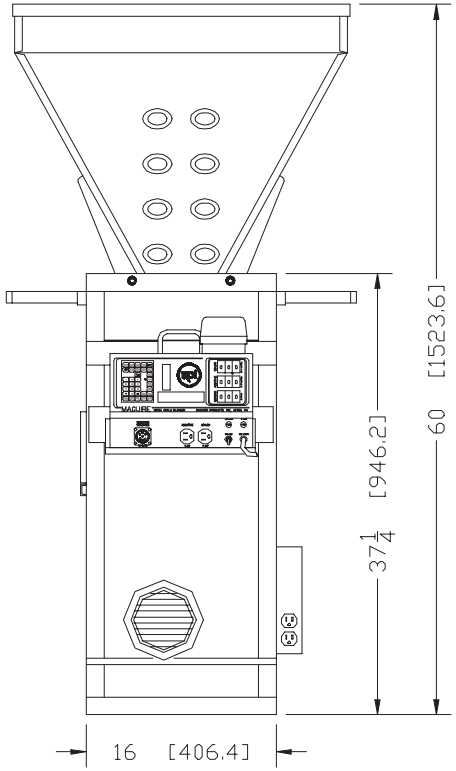

WSB-960 FOOTPRINT

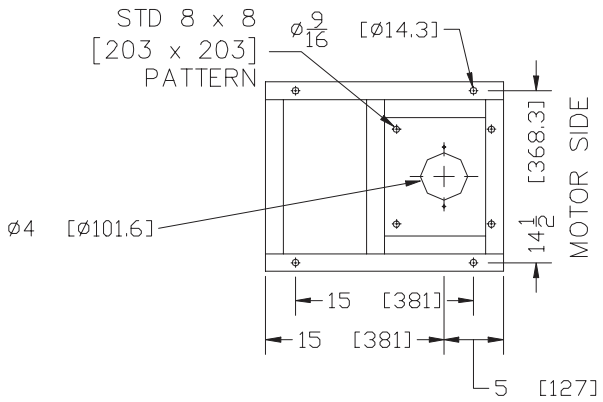

MAGUIRE PRODUCTS, INC.
11 Crozerville Road, Aston, PA 19014
Tel: (888) 459-2412
Fax: (610) 459-2700
http://www.maguire.com

MAGUIRE WEIGH SCALE BLENDER MODEL WSB-960	
DRAWN BY: CGC	DATE DRAWN: 11/15/94
SHEET: 1 OF 1	DATE CHANGED: 8/14/97