HOPPER CAPACITY IS 4.4 CU. FT. [125 LITRES]

EXTENSION CAPACITY IS 4.5 CU. FT. [128 LITRES]

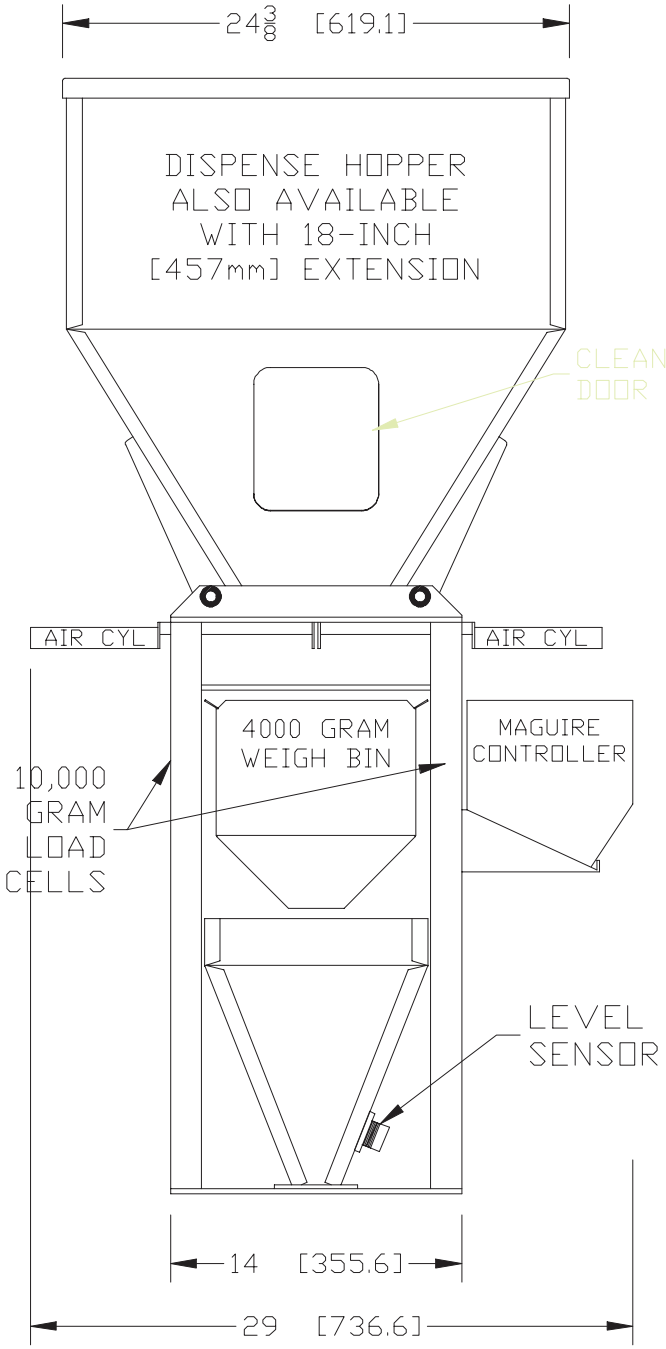

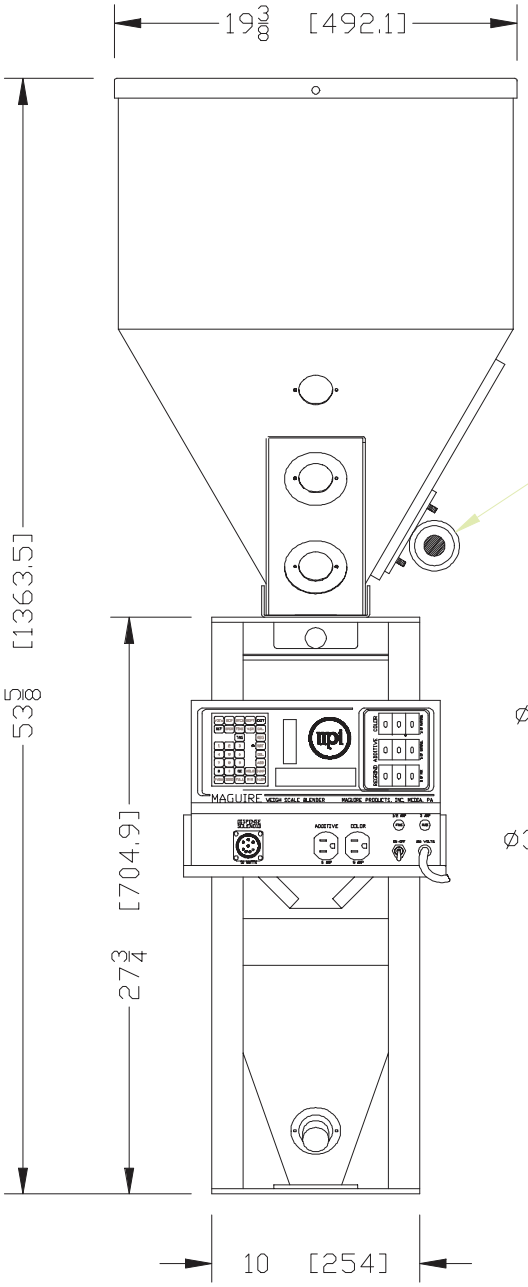

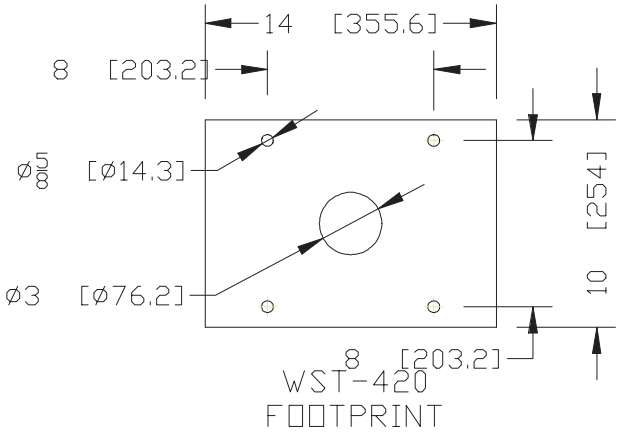

ALL DIMENSIONS ARE IN INCHES [MM]

Maguire Products Inc. Aston, PA 19014 USA (610) 459-4300	WST-420 4000 GRAM TOTALIZER	
	DRAWN BY: CGC	DATE: 6/6/96
	SHEET 1 OF 1	