WXB-160 FRONT VIEW

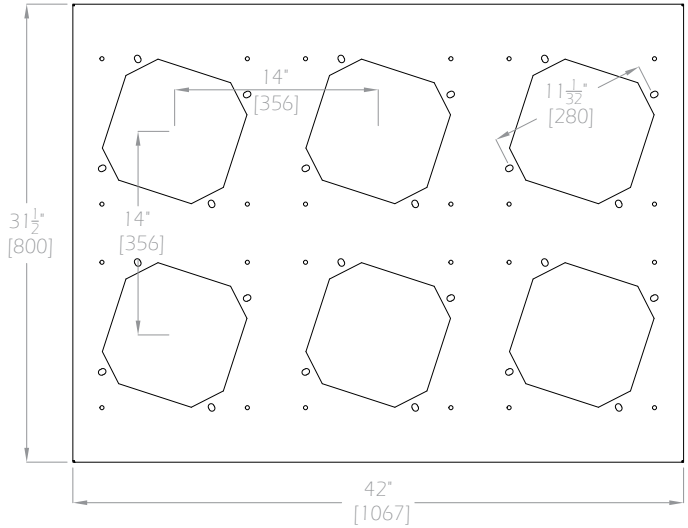

WXB-160 Valve Deck

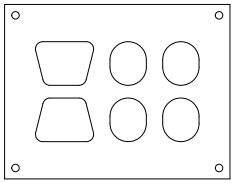

WXB-160 FRONT VIEW

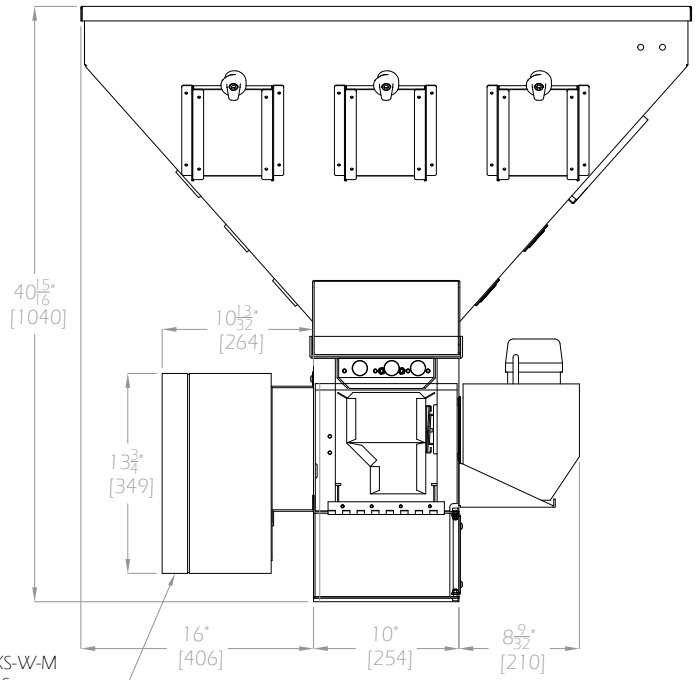

OPXS-W-M
Maguire+Syncro
Extrusion Control
for WSB/WXB
(Power Box)

WXB-160 SIDE VIEW

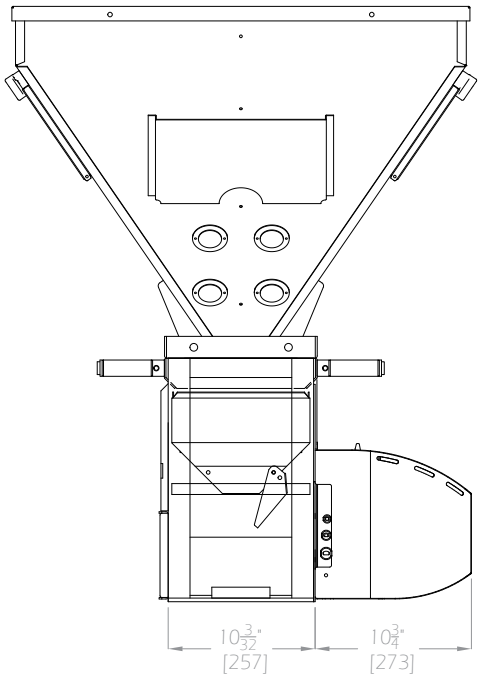

WXB-160 Footprint

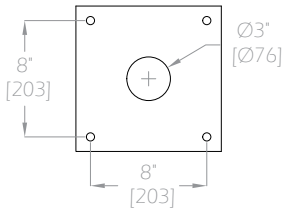

STD WXB Bottom Plate
¼" [6.4] Steel Plate

THIS DRAWING IS THE PROPERTY OF MAGUIRE PRODUCTS INC. AND MUST BE RETURNED ON REQUEST IT MUST NOT BE COPIED OR PASSED TO A THIRD PARTY.
DRAWING IS NOT TO SCALE.

TITLE	WXB-160	
DRAWN	FF	DATE 17/02/2019

MAGUIRE®
Intelligent Simplicity