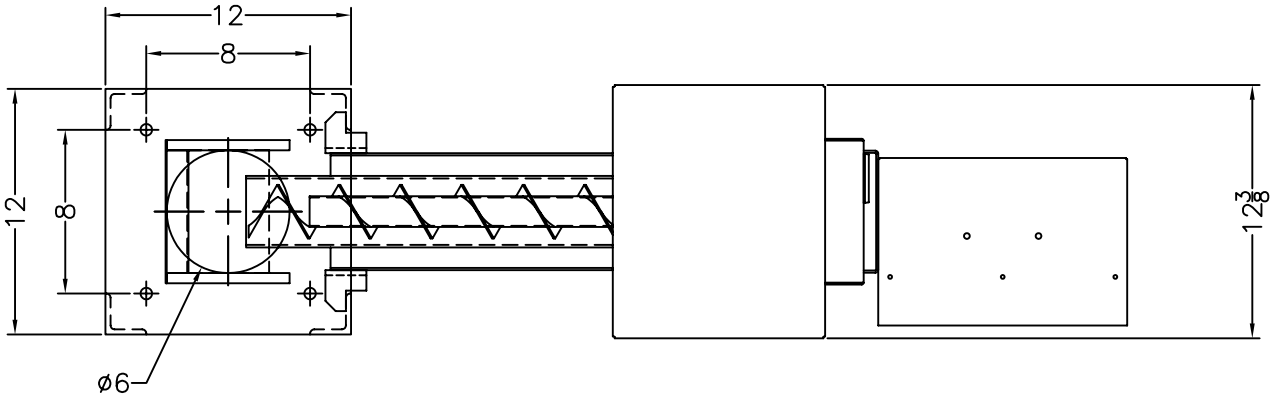

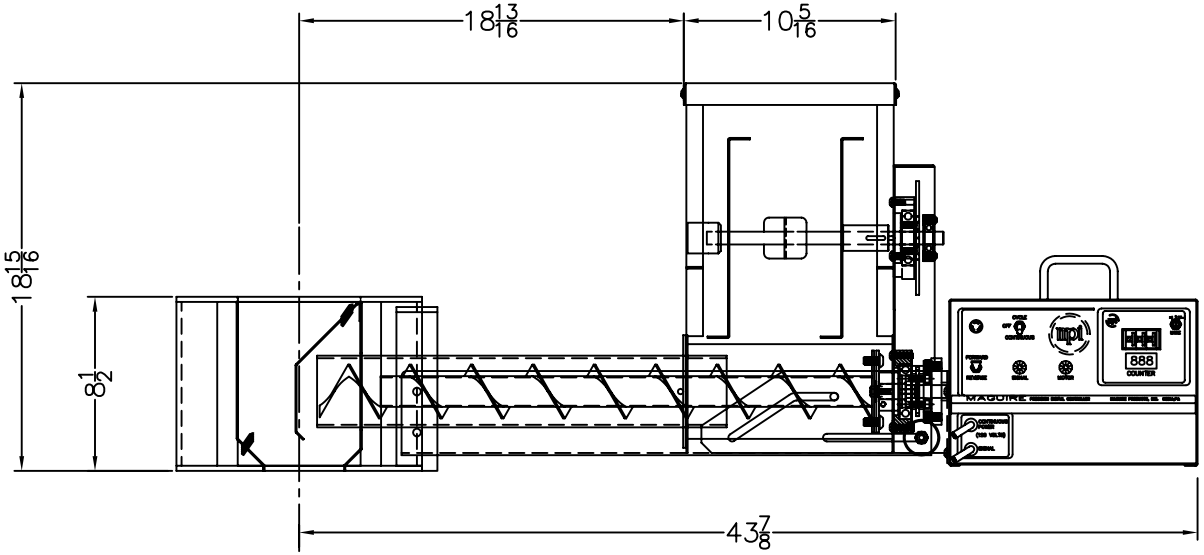

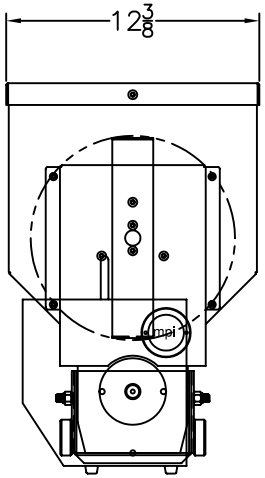

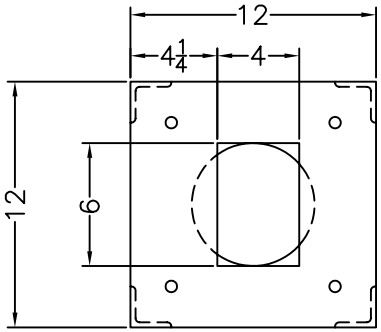

Feeder Outlet

MAGUIRE
PRODUCTS, INC.
11 Crozerville Road, Aston, PA 19014
Tel: (888) 459-2412
Fax: (610) 459-2700
http://www.maguire.com

Model MPF-48
Powder Feeder,
3" Auger

Drawn by:	Date drawn:
CGC	9/19/08
Material:	Paint/Finish: