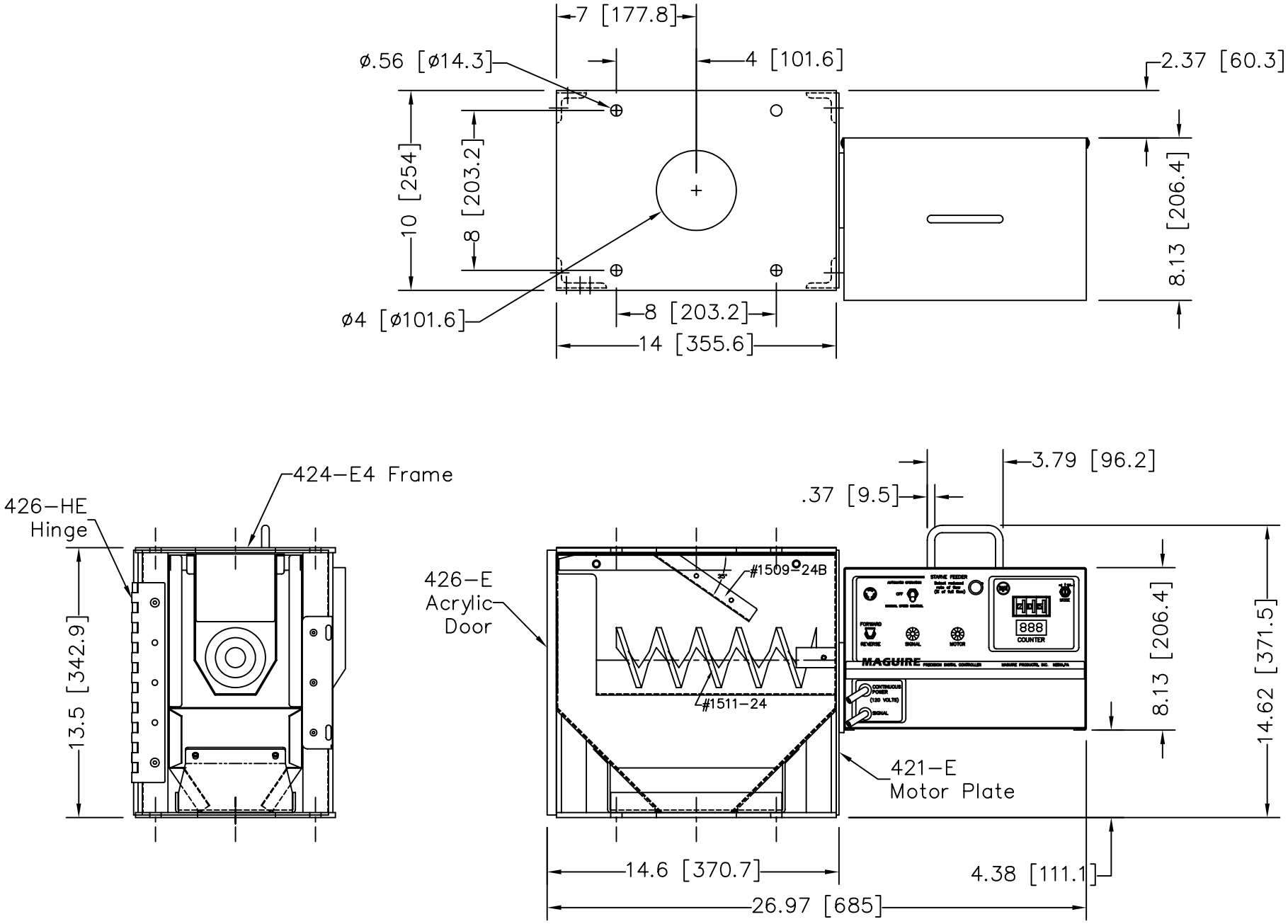

REV	ECN	DATE

MAGUIRE
PRODUCTS, INC.
11 Crozerville Road, Aston, PA 19014
Tel: (888) 459-2412
Fax: (610) 459-2700
http://www.maguire.com

Model MSF-4894
High Output (2000 PPH)
Starve Feeder

Drawn by:	Date drawn:
JSH	4/27/99
Sheet: 1 of 1	Changed: