MAGUIRE PRODUCTS INC.

EXTRUSION & YIELD CONTROL

Gravimetric Gateway®
LineMaster™

Extrusion Control & Yield Control
Quick Start Tutorial Manual

Computer Communications Software
for the Maguire WSB, WST, WSD, LIW & MGF

INSTALLATION • OPERATION • MAINTENANCE

Revision: 4-13-2021

Copyright © Maguire Products, Inc. 2021

Maguire LineMaster ™
Loss-in-Weigh System

Extrusion Control & Yield Control
Weigh Scale Blender Supplement

© 2021 Maguire Products Inc.

To every person concerned with use and maintenance of the Maguire LineMaster™ it is recommended to read thoroughly these operating instructions. Maguire Products Inc. accepts no responsibility or liability for damage or malfunction of the equipment arising from non-observance of these operating instructions.

To avoid errors and to ensure trouble-free operation, it is essential that these operating instructions are read and understood by all personnel who are to use the equipment.

Should you have problems or difficulties with the equipment, please contact Maguire Products Inc. or your local Maguire distributor.

These operating instructions only apply to the equipment described within this manual.

Manufacturer's Contact Information

Maguire Products Inc.
11 Crozerville Road
Aston, PA. 19014

Phone: 610.459.4300
Fax: 610.459.2700

Website: http://www.maguire.com

Email: info@maguire.com

Table of Contents:

LineMaster™ Overview **5**

LineMaster™ Kits and Components **18**
- **Parts Identification** **18**
- **LineMaster Kits** **19**

LineMaster™ Installation **20**
Safety Warnings **20**
- **Loss-In-Weigh Hopper Installation** **21**
- **General Wiring Installation Notes** **23**
- **XC-1 – Extrusion Control Installation** **25**
- **XC-1 – Extrusion Control Wiring Diagram** **26**
- **XC-2 – Yield Control X or Yield Control T Installation** **28**
- **XC-2 – Yield Control X or Yield Control T Wiring Diagram** **29**
- **XC-3 – Yield D Installation** **31**
- **XC-3 – Yield D Wiring Diagram** **33**

LineMaster™ Operation **35**
- **Standalone Operation** **35**
  - **XC-1 Throughput Control** **35**
  - **XC-2 – Yield Control X or Yield Control T** **37**
  - **XC-3 – Yield D** **40**

Gravimetric Gateway Software (G2) **41**
- **G2 Software Setup and Operation** **43**

Controller Description **61**
- **Communications** **65**
- **Controller Keypad** **66**
- **Star Functions** **69**
- **Parameters** **75**
- **Alarms** **80**
- **Load Cell Zero Weight Calibration** **81**
- **Load Cell Full Weight Calibration** **82**

General Information
- **Updating Controller Firmware** **83**
- **LIW Model Specifications and Dimension Drawings** **84**
- **Warranty** **93**
- **Contact Information** **93**

LineMaster™ Extrusion Control

LineMaster™ is for all continuous extrusion processes including film, sheet, pipe, coating and lamination, wire and cable and compounding. LineMaster's flexible design provides several measurements and control options, and includes an integrated system for combining gain-in-weight dosing control with loss-in-weight extrusion control. The system is an easy to use low cost alternative to competitive loss-in-weight systems without compromising performance and control.

Benefits of LineMaster™

- Improved product quality through permanent and consistent control
- Reduced material costs through improved yield
- Automatic regulation of extruder output
- Increased line productivity with fast start-up and reduced production scrap
- Quick product changeover
- Alarms and user security

WEIGHT MEASUREMENT OPTIONS

Basic Extrusion Control with Maguire® Blender
Extrusion line throughput may be determined by monitoring material consumption as recorded by the batch weighing process of the blender divided by the time the batch takes to be consumed. Throughput is determined by the blender controller when 5 consecutive batches have shown a steady throughput rate. If 2 batches show consecutive errors an adjustment is made to maintain the desired throughput rate.

Basic Extrusion Control provides a very cost effective solution for long product runs on mono-layer lines. The blender must be throat mounted. Basic Extrusion Control is simple, has less mechanical parts and requires low maintenance.

Basic Extrusion Control Limitations:
- Frequent job and/or material changes
- Blender not mounted on the extruder throat (surge hoppers / floor stands)
- Co-extrusion lines running low throughputs
- Lines with frequent ramp up / ramp down requirements
- Restricted loading systems or poor flowing materials

Enhanced Extrusion Control with Loss-in-Weight Hopper
The LineMaster™ product range has the option of monitoring material consumption by a loss-in-weight hopper mounted on the process throat. The weight consumption data can be reported to one of two control options: Enhanced Extrusion Control with a Maguire blender integrates the extrusion control functions into the blender controller for a single point of control. The second option is Enhanced LIW Extrusion Control, which utilizes LineMaster Control Operator Interface (XCC) to be used as a stand-alone solution for throughput or yield control. Additionally, it can be utilized in a multi-layer control application.

The weight consumption data is communicated directly to the respective controller and updates consumption information frequently. The loss-in-weight hopper determines accurate throughput within 5 seconds and updates thereafter every 1 second.

XC CONTROL OPTIONS
LineMaster is a comprehensive range of products that is designed to serve the vast majority of extrusion operations that require solutions based at every level of the cost / performance spectrum. The available control options provide throughput control for pounds or kilograms per hour, weight per length control for lb/ft or gm/M and gauge control in microns.

XC-1 Throughput Control
Control is maintained by monitoring the throughput of the process and regulating the extruder speed. The XCC controller utilizing the consumption data from the LIW hopper communicates with the XCD-X Extruder Drive Speed Control to adjust the extruder speed via a 0-10 volt signal to maintain the throughput target.

XC-2 Yield Control
XC-2 offers the ability to maintain a product's weight per length (lb/ft or gm/M) by monitoring the process throughput against the line speed. An XCE Digital Encoder mounted on a take-off device monitors the line speed. Control is accomplished by adjusting either the extruder speed with a XCD-X Drive Speed Control Module by referencing the manually controlled line speed or controlling the take-off speed with a XCD-T Line Speed Control Module from a manually controlled extruder.

XC-3 Multi-Layer Yield Control via Computer and G2 Software
XC-3 provides complete weight per length control (lb/ft or gm/M), via simultaneous control of the extruder and take-off. Controllers are connected via a high speed serial or Ethernet network using the XC Software. Gauge or thickness control can be initiated in set-up utilizing data of the materials or blend specific gravity.

Advanced Weigh Control Benefits:
- Lines requiring constant feedback
- Frequent job / material / production changes
- Blenders not mounted on the extruder throat
- Co-extrusion lines
- Lines requiring frequent ramp up / ramp down control
- Lines using only one material

Computer Control and Data Options

With the LineMaster™ product range, the Gravimetric Gateway ™ (G2) software program is available for centralized control and data reporting. The software program is an integral part of the XC-3 Extrusion Multi-layer Control and as an option for mono- layer applications of throughput or yield control.

A brief overview of G2
A Gravimetric Gateway™ Server (G2 Server) provides communication with all Maguire controllers for data collection and control. The G2 software enables communication directly from the server with one or more blender or loss-in-weight controllers to connect remotely from anywhere over a TCP/IP network using the Gravimetric Gateway™ Client software. The server provides two-way communication with the network of blenders and loss-in-weight controllers for constant retrieval of information such as:

- Precise weight of all materials
- Settings (sending and retrieval)
- Recipe numbers
- Work order numbers
- Operators information

The G2 server organizes and tracks material usage and allows the user to gather accurate information according to a number of factors including: time period (day, shift, etc), process machine, work order, operator, recipe, blender and line recipe.

Throughout and Yield Control

LineMaster can monitor and control up to 7 layers; each layer is graphically depicted. All lines visually merge where the Total Throughput is displayed. Take-off and downstream controls are displayed at the right showing line speed, weight per length and/or gauge.

A more detailed examination of each blender's settings and output can be accessed through the Line Blender Screen by clicking on the individual extruder.

Throughput Reporting
The software also allows reporting on average throughput, total throughput, and the percentage of total uptime of an individual blender or all blenders in the line. Reports are based on start/stop date and time, weight units and percentage of run time.

Event Monitoring
The computer software also incorporates an event monitoring service allowing users to access a history of alarms, actions and changes.

Materials and Blend Management
The software can also store a complete dataset of materials and recipes used in production. This data is easy to edit and maintain, and allows for full tracking of material consumption and inventory management – a valuable tool for data regarding quality, certification, costs and productivity.

REDUCE RESIN CONSUMPTION WITH ENHANCED GRAVIMETRIC EXTRUSION YIELD CONTROL

The diagram on the following page illustrates a 3-layer film line utilizing LineMaster™ Extrusion Control. Loss-in-weight hoppers are mounted on 3 extruders that are feeding the die producing the film bubble. The loss-in-weight hoppers provide precise throughput data and an encoder (mounted on nip rolls or any rotating shaft) provides line speed data. Any change in throughput due to screen pack, back pressure, melt temperature or other variables is detected and adjusted for. Typical process variations are reduced with LineMaster gravimetric control to within ± 0.5%, significantly reducing resin consumption. Typically, 3 to 4% resin savings is realized resulting in payback in as little as 6 months. LineMaster simplifies line start-up, enables rapid job changes and reduces scrap during string-up.

LineMaster™ Encoder – Model XCE

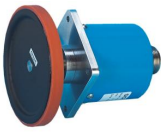

Extruder Drive Speed Control – Model XCD-X

Take-off / Line Speed Control – Model XCD-T

LineMaster™ Speed Control modules communicate directly with the XCC or blender controllers. The controller receives process throughput updates from the loss-in-weight hopper and commands the speed control modules to increase or decrease screw rpm.
The speed control modules provide a 0 – 10 Vdc analog signal to the extruder or take-off drive being controlled. The XCD Speed Control Modules include a digital potentiometer, which replaces the existing manual pot or can communicate with an existing digital speed control. A toggle switch is included to provide selection of either Manual or Automatic control.

APPLICATIONS
Wood Composite
Corrugated
Pipe & Tubing
Wire & Cable

XCC controller

Overview - XC-1 *LineMaster®* Throughput Control (lb/hr or kg/hr)

Monitors throughput - Adjusts extruder drive speed to maintain product weight per hour

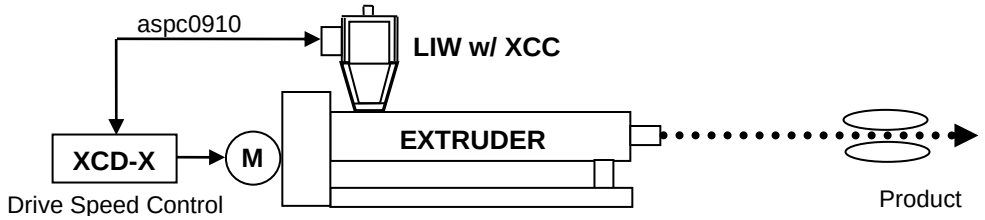

Component Installation

The system is comprised of a mass flow hopper assembly, a controller with operator interface and a drive speed control package.

The mass flow hopper assembly is mounted on the throat of the extruder. A weigh hopper suspended from a set of load cells provides the material flow data to the LIW controller. The extruder drive control package, which includes a digital potentiometer to replace the existing analog extruder speed pot, is mounted in the control cabinet and monitors and controls the signal to the extruder drive.

Principal of Operation

The XC-1 Extrusion Throughput Control System is designed to maintain a products weight over time by monitoring the material consumption of the process through the mass flow hopper on the throat of the extruder in pounds or kilos per hour, and adjusts the extruder speed to maintain the desired throughput. The actual throughput is compared to a desired target throughput of the product entered on the LIW controller. The LIW controller communicates to the XCD-X Extruder Drive Control, which adjusts the voltage or reference signal to the extruder drive, which will increase, or decrease to maintain the desired throughput.

A digital potentiometer replaces the existing rotary drive speed control on the extruder drive panel and communicates with the XCD-X Extruder Drive Control which is mounted in or on the control cabinet and is connected to the LIW controller.

Typical Start-up

Upon a first time start-up of the process, the throughput control system is placed in the Manual Mode. The LIW controller learns the rate of the material flow through the mass flow hopper within 45 seconds and enters the logarithmic value in the control parameters. The controller will display the learned throughput rate and indicate the process can be switched into the Auto or Locked Mode. A target value for the process throughput desired is entered as a set point on the LIW controller. The system can be switched into the Auto or Lock Mode and the speed of the extruder will be adjusted to maintain the target process throughput. If a change to the process throughput is required the new target is entered and the controller will instruct the extruder drive to increase crease or decrease respectively. The reaction of the LIW system to the process rate change is almost instantaneous and will settle at the desired throughput within 45 seconds of the process reaching the requested target.

Once the LIW controller learns the throughput rate of a material, it is stored in the memory of the controller. The controller can be left in the Auto or Locked mode if the same material is continued or a similar bulk density material is used. If a new material with a different bulk density is used, the start-up procedure must be re-initiated.

Components

LIW-XX Mass Flow Hopper (sized for the required throughput)
as7190 Surge Hopper (optional)
XCC LineMaster Control Operator Interface
XC-1 LineMaster Extrusion Yield Control w/ Line Speed Control Package
includes the following components:

- XCD-X Extruder Drive Control, Analog 1-10 Vdc
- aspc0910 LIW to Drive Interface Cable, 100 ft.

An optional surge hopper, as7190, which mounts atop the LIW is available if the volume of material in the transition from the mezzanine mounted blender is less than the capacity of the LIW hopper

LIW MODEL	THROUGHPUT		HOPPER CAPACITY	
	LB/HR	KG/HR		
LIW-05	5 – 300	2.2 – 136	.3 ft^3	8.5 liters
LIW-10	100 - 600	45 – 272	.6 ft^3	17.0 liters
LIW-25	500 – 1,500	228 – 682	1.6 ft^3	45.3 liters
LIW-40	1,000 – 3,000	454 – 1,364	2.5 ft^3	70.8 liters

Overview - XC-2X *LineMaster*® Extrusion Yield Control w/ Extruder Drive Control

Monitors process throughput and take-off speed, controls extruder drive speed to maintain product yield (weight per length)

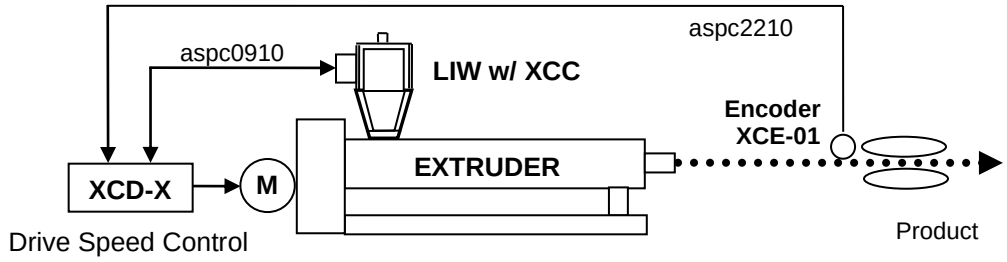

Component Installation

The system is comprised of a mass flow hopper assembly, a controller with operator interface, a drive speed control package and an encoder.

The mass flow hopper is mounted on the throat of the extruder. A weigh hopper suspended from a set of load cells provides the material flow data to the LIW controller. The drive speed control package, which includes a digital potentiometer to replace the existing analog extruder speed pot, is mounted in the control cabinet and monitors and controls the signal to the extruder drive. The encoder or pulse generator is mounted on the haul off to monitor the speed of the line.

Principal of Operation

The XC-2X Extrusion Yield Control System is designed to maintain a products weight per length (yield) by monitoring the material consumption of the process through the mass flow hopper on the throat of the extruder in kilos per hour, and collates the data with the line speed monitored by an encoder mounted on the shaft of the haul off in meters per minute to provide a calculated actual product yield in grams or kilograms per meter. The actual yield is compared to a desired target yield of the product entered on the LIW controller. The LIW controller communicates to the XCD-X Extruder Drive Speed Control, which adjusts the voltage or reference signal to the extruder drive, which will increase or decrease with respect to the line speed to maintain the desired yield.

A digital potentiometer replaces the existing rotary drive speed control on the extruder drive panel and communicates with the XCD-X Drive Speed Control which is mounted in or on the control cabinet and is connected to the LIW controller.

Typical Start-up

Upon a first time start-up of the process, the yield control system is placed in the Manual Mode. The LIW controller learns the rate of the material flow through the mass flow hopper within 45 seconds and enters the logarithmic value in the control parameters. The controller will display the learned yield rate and indicate the process can be switched into the Auto or Locked Mode. A target value for the product weight per length desired is entered as a set point on the LIW controller. The system can be switched into the Auto or Lock Mode and the speed of the extruder will be adjusted to maintain the target weight per length value. As the line speed is increased to a production level, the LIW controller will acknowledge the change and increase the signal to the drive to maintain the desired product yield. The reaction of the LIW system to the process rate change is almost instantaneous and will settle at the desired yield within 45 seconds of the process reaching the final speed.

Once the LIW controller learns the throughput rate of a material, it is stored in the memory of the controller. The controller can be left in the Auto or Locked mode if the same material is continued or a similar bulk density material is used. If a new material with a different bulk density is used, the start-up procedure must be re-initiated.

Components

LIW-XX Mass Flow Hopper (sized for the required throughput)
as7190 Surge Hopper (optional)
XCC LineMaster Control Operator Interface
XC-2X LineMaster Extrusion Yield Control w/ Extruder Drive Control Package
includes the following components:

- XCD-X Extruder Drive Speed Control, Analog 1-10 Vdc
- aspc0910 LIW to Drive Interface Cable, 100 ft.
- XCE-01 Encoder, Pulse Generator
- aspc2210 Encoder Interface Cable, 100 ft.

An optional surge hopper, as7190, which mounts atop the LIW is available if the volume of material in the transition from the mezzanine mounted blender is less than the capacity of the LIW hopper.

LIW MODEL	THROUGHPUT LB/HR	THROUGHPUT KG/HR	HOPPER CAPACITY	
LIW-05	5 – 300	2.2 – 136	.3 ft^3	8.5 liters
LIW-10	100 - 600	45 – 272	.6 ft^3	17.0 liters
LIW-25	500 – 1,500	228 – 682	1.6 ft^3	45.3 liters
LIW-40	1,000 – 3,000	454 – 1,364	2.5 ft^3	70.8 liters

Overview - XC-2T LineMaster® Extrusion Yield Control - Take-off Drive Control

Provides control of haul-off to maintain weight per length via feedback from encoder mounted on downstream haul-off

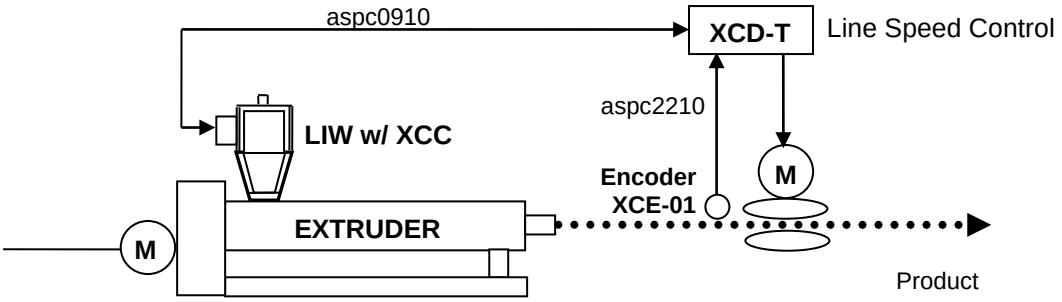

Component Installation

The system is comprised of a mass flow hopper assembly, a controller with operator interface, a line speed control package and an encoder.

The mass flow hopper is mounted on the throat of the extruder. A weigh hopper suspended from a set of load cells provides the material flow data to the LIW controller. The line speed control package, which includes a digital potentiometer to replace the existing analog take-off speed pot, is mounted in the control cabinet and monitors and controls the signal to the take-off drive. The encoder or pulse generator is mounted on the haul off to monitor the speed of the line.

Principal of Operation

The XC-2T Extrusion Yield Control System is designed to maintain a products weight per length (yield) by monitoring the material consumption of the process through the mass flow hopper on the throat of the extruder in kilos per hour, and collates the data with the line speed monitored by an encoder mounted on the shaft of the haul off in meters per minute to provide a calculated actual product yield in grams or kilograms per meter. The actual yield is compared to a desired target yield of the product entered on the LIW controller. The LIW controller communicates to the XCD-T Take-off Drive Speed Control, which adjusts the voltage or reference signal to the Take-off drive, which will increase or decrease with respect to the extruder speed to maintain the desired yield.

A digital potentiometer replaces the existing rotary drive speed control on the take-off drive panel and communicates with the XCD-T Take-off Speed Control which is mounted in or on the control cabinet and is connected to the LIW controller.

Typical Start-up

Upon a first time start-up of the process, the yield control system is placed in the Manual Mode. The LIW controller learns the rate of the material flow through the mass flow hopper within 45 seconds and enters the logarithmic value in the control parameters. The controller will display the learned yield rate and indicate the process can be switched into the Auto or Locked Mode. A target value for the product weight per length desired is entered as a set point on the LIW controller. The system can be switched into the Auto or Lock Mode and the speed of the extruder will be adjusted to maintain the target weight per length value. As the line speed is increased to a production level, the LIW controller will acknowledge the change and increase the signal to the

drive to maintain the desired product yield. The reaction of the LIW system to the process rate change is almost instantaneous and will settle at the desired yield within 45 seconds of the process reaching the final speed.

Once the LIW controller learns the throughput rate of a material, it is stored in the memory of the controller. The controller can be left in the Auto or Locked mode if the same material is continued or a similar bulk density material is used. If a new material with a different bulk density is used, the start-up procedure must be re-initiated.

Components

LIW-XX Mass Flow Hopper (sized for the required throughput)
as7190 Surge Hopper (optional)
XCC LineMaster Control Operator Interface
XC-2T LineMaster Extrusion Yield Control w/ Line Speed Control Package
includes the following components:

- XCD-T Take-off Drive Speed Control, Analog 1-10 Vdc
- aspc0910 LIW to Drive Interface Cable, 100 ft.
- XCE-01 Encoder, Pulse Generator
- aspc2210 Encoder Interface Cable, 100 ft.

An optional surge hopper, as7190, which mounts atop the LIW is available if the volume of material in the transition from the mezzanine mounted blender is less than the capacity of the LIW hopper

LIW MODEL	THROUGHPUT LB/HR	KG/HR	HOPPER CAPACITY	
LIW-05	5 – 300	2.2 – 136	.3 ft^3	8.5 liters
LIW-10	100 - 600	45 – 272	.6 ft^3	17.0 liters
LIW-25	500 – 1,500	228 – 682	1.6 ft^3	45.3 liters
LIW-40	1,000 – 3,000	454 – 1,364	2.5 ft^3	70.8 liters

XC-3 *LineMaster*® Yield Control – Extruder & Take-off Drive Control

Monitors throughput and line speed. Adjusts extruder and line speed to maintain product weight per length. Requires XC-C LineMaster computer controller and is typically used for multi-layer co-ex applications.

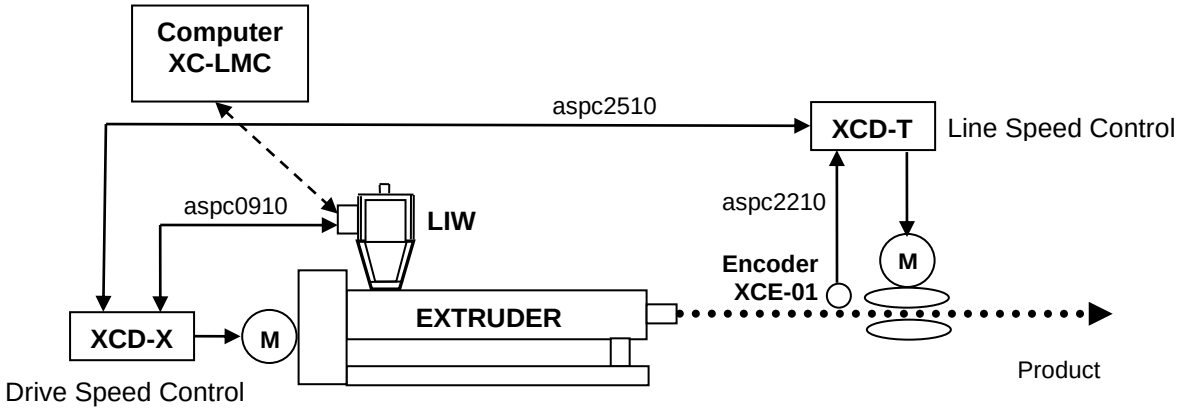

Component Installation

The system is comprised of a mass flow hopper assembly, a controller with operator interface, an extruder drive speed control package, a line speed control package and an encoder. The LineMaster XC-LMC computer control is required for simultaneous control of both extruder drive speed and line speed.

The mass flow hopper is mounted on the throat of the extruder. A weigh hopper suspended from a set of load cells provides the material flow data to the LIW controller. The line speed control package, which includes a digital potentiometer to replace the existing analog take-off speed pot, is mounted in the control cabinet and monitors and controls the signal to the take-off drive. The encoder or pulse generator is mounted on the haul off to monitor the speed of the line. The extruder drive speed control package, which includes a digital potentiometer to replace the existing analog extruder speed pot, is mounted in the control cabinet and monitors and controls the signal to the extruder drive. The two drive controllers communicate to with one another to provide a synchronous ramp of all drives as directed by the LineMaster XC-LMC computer.

Principal of Operation

The XC-3 Extrusion Yield Control System is designed to maintain a products weight per length (yield) by monitoring the material consumption of the process through the mass flow hopper on the throat of the extruder in kilos per hour, and collates the data with the line speed monitored by an encoder mounted on the shaft of the haul off in meters per minute to provide a calculated actual product yield in grams or kilograms per meter. The actual yield is compared to a desired target yield of the product entered on the LIW controller. The LIW controller communicates to the XCD-X Extruder Drive Speed Control which adjusts the voltage or reference signal to the extruder drive to increase or decrease with respect to the line speed to maintain the desired yield.

Digital potentiometers replaces the existing rotary drive speed control on the take-off drive and extruder drive and communicate with the XCD-T Take-off Speed Control and XCD-X Extruder Drive Speed Control which is mounted in or on the control cabinet and is connected to the LIW controller.

Typical Start-up

Upon a first time start-up of the process, the yield control system is placed in the Manual Mode. The LIW controller learns the rate of the material flow through the mass flow hopper within 45 seconds and enters the logarithmic value in the control parameters. The controller will display the learned yield rate and indicate the process can be switched into the Auto or Locked Mode. A target value for the product weight per length desired is entered as a set point on the LIW controller. The system can be switched into the Auto or Lock Mode and the speed of the extruder will be adjusted to maintain the target weight per length value. As the line speed is increased to a production level, the LIW controller will acknowledge the change and increase the signal to the drive to maintain the desired product yield. The reaction of the LIW system to the process rate change is almost instantaneous and will settle at the desired yield within 45 seconds of the process reaching the final speed.

Once the LIW controller learns the throughput rate of a material, it is stored in the memory of the controller. The controller can be left in the Auto or Locked mode if the same material is continued or a similar bulk density material is used. If a new material with a different bulk density is used, the start-up procedure must be re-initiated. According to the configuration of the XC program the drives will simultaneously increase or decrease as either the line speed, throughput or gauge requirements are changed.

Components

LIW-XX Mass Flow Hopper (sized for the required throughput)
as7190 Surge Hopper (optional)
XCC LineMaster Control Operator Interface
XC-3 LineMaster Extrusion Yield Control w/ Drive & Line Speed Control
includes the following components:

- XCD-X Extruder Drive Speed Control, Analog 0 – 10 Vdc
- aspc0910 LIW to Drive Interface Cable, 100 ft.
- XCD-T Take-off Drive Speed Control, Analog 0 -10 Vdc
- aspc2510 Drive Communications Cable, 100 ft.
- XCE-01 Encoder, Pulse Generator
- aspc2210 Encoder Interface Cable, 100 ft.

An optional surge hopper, as7190, which mounts atop the LIW is available if the volume of material in the transition from the mezzanine mounted blender is less than the capacity of the LIW hopper

LIW MODEL	THROUGHPUT		HOPPER CAPACITY	
	LB/HR	KG/HR		
LIW-05	5 – 300	2.2 – 136	.3 ft^3	8.5 liters
LIW-10	100 - 600	45 – 272	.6 ft^3	17.0 liters
LIW-25	500 – 1,500	228 – 682	1.6 ft^3	45.3 liters
LIW-40	1,000 – 3,000	454 – 1,364	2.5 ft^3	70.8 liters

LineMaster™ Kits and Components

Parts Identification

Extruder Speed Control

Take-off Speed Control

LineMaster Controller

Encoder, Encoder Wheel

100 foot cable

24 volt power supply

Maguire LIW 5

Maguire LIW 10

Maguire LIW 20

Maguire LIW 40

Optional Components:

Throat Mount Adapter with drain port

Surge Hopper
1.25 ft^3 - LIW-05 & 10
2.25 ft^3 - LIW-25 & 40

LineMaster™ Kits

Depending on the application your kit may include the following:

- **Extrusion Control** – LineMaster Controller, Extruder Speed Control Interface, Cabling and strain relief.

- **Yield-X** - LineMaster Controller, Extruder Speed Control Interface, Cabling, cable strain relief, mounting hardware, 24 Volt Power Supply, Encoder, Encoder Wheel (12 inch circumference), Encoder Cable.

- **Yield T -** LineMaster Controller, Take-off Speed Control Interface, Cabling, cable strain relief, mounting hardware, 24 Volt Power Supply, Encoder, Encoder Wheel (12 inch circumference), Encoder Cable.

- **Yield D -** LineMaster Controller, Extruder Speed Control Interface, Take-off Speed Control Interface, Cabling, cable strain relief (2), mounting hardware, 24 Volt Power Supply, Encoder, Encoder Wheel (12 inch circumference), Encoder Cable. Requires the G2 software and dedicated computer system. G2 Not included with kit but may be provided separately.

Additional Options

- LineMaster 12 Software Controller – Up to 12 components, controlling a blender and a LIW hopper (Loss-In-Weight hopper).

- LIW Stand Alone LineMaster Controller – Controls a single LIW hopper (Loss-In-Weight hopper) tracking throughput of the LIW.

LineMaster™ Installation

In this section:

- **Safety Warnings**
- **Loss-In-Weigh Hopper Installation**
- **General Wiring Installations Notes and Considerations**
- **XC-1 – Extrusion Control Installation**
- **XC-2 - Yield Control X or Yield Control T Installation**
- **XC-3 – Yield D Installation**

Safety Warnings

Electrical Connection

RISK OF INJURY!

Only qualified technicians should make electrical connections. These instructions provide wiring diagrams. Wiring installations should only be performed by a qualified electrician who is familiar with these types of installation. Prior to installation, thoroughly review the wiring diagram specific to your installation.

Wire Installations – Preventing Interference or Damage

When installing communication wires, be sure to avoid any sources of interference such as vacuum loader lines (discharged static), high voltage lines and transformers and florescent lights. You should avoid these sources by a distance of a foot or more so that communication is not disrupted by interference and sensitive electronic components are not damaged.

Lifting

DANGER OF INJURY!

If the weight is unevenly distributed, the LIW Hopper may tip and injure people when it is lifted.

Weights of the LIW Hopper Models range from 56 pounds (25.5 Kg) to 140 pounds (63.6 Kg). Lift points are the vertical supports of the black metal frame.

Unpacking and Setup

Unpacking - Removing from Carton

Cut sides and top flaps, unscrew screws and washers from the sides at the skid. Remove carton, remove cardboard tray at the top of the carton. Cut and remove plastic wire ties from the LIW hopper located at the top of the hopper inside the black frame member. Cut and remove plastic wire ties from the base LIW hopper and remove the cardboard tub insert from the base of the LIW hopper. Remove any packing material from around the LIW hopper and brackets.

Return Shipping Information

NOTE

Save the carton and cardboard if at all possible, reuse for return to factory. Use strong plastic wire ties to affix the LIW Hopper to the top of the black frame member and place the cardboard insert under the base of the LIW hopper and wire tie it tight to elevate LIW hopper up and off of the load cells. Use packing material around the individual components.

To remove the skid, unbolt the four bolts that secure the LIW Hopper to the skid. The bolts are located at the bottom of the LIW Hopper frame and go through the wooden skid.

These bolts can be loosened while the LIW Hopper and the skid are on the ground. Reverse procedure to install LIW Hopper on the skid.

Loss-In-Weigh Hopper Installation

Install LIW Hopper on Extruder

The base of the LIW Hopper frame is pre-drilled with 4 holes. The LIW 5 has a smaller hole pattern while the LIW 10, LIW 25 and LIW 40 have a larger pattern. The LIW Hopper is meant to be install directly onto the throat of the extruder. Bolt patterns and dimensions for the base of the LIW models as well as the optional Throat Mount Adapter can be found in the back of this manual. The LIW Hopper may be installed directly onto the optional Throat Mount Adapter with drain port.

Optional Throat Mount Adapter with drain port

Install material line

The LIW Hopper comes equipped with a Stub Tube adapter. On the LIW 5 and LIW 10, the Stub Tube is 3 inch. On LIW 25 and LIW 40 the Stub tube is 4 inch. If you using a direct material line connect it to this adapter. Note: If you are using a material supply line be sure that the volume of material held within the supply line is adequate to fill the LIW Hopper to prevent material starvation.

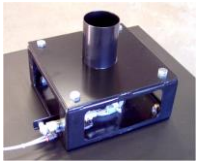

Install Optional Surge Hopper

If you are using the Optional Surge Hopper to supply material to the LIW, remove the Stub Tube Adapter (if equipped) and bolt the Surge hopper to the LIW using the 4 boltholes and the supplied hardware.

Install LIW Controller

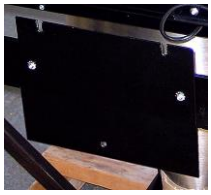

Unpack the LIW controller and hang the controller box to the Controller Mount plate located on the side of the LIW frame. Have the controller using the protruding screw heads on the back of the controller and the notches on the mount plate. The controller can be secured in place using one ¼-20 x ¾ screw and threading it through the back of the mount plate and into the back panel of the controller. On LIW 5 models, the mount plate is part of the frame.

Connect Cables

Two cables are supplied with the LIW Hopper. Connect the 3 foot DB25 cable to the Controller's Load Cell port and the LIW Loadcell port located on the LIW frame. On LIW 5 models, this cable is attached to the LIW frame and should be connected to the controller's Load Cell port. Connect the 3 foot 4-Pin Amp cable to the Fill Valve on the Controller and the LIW Valve on the frame.

Connect Air Line

Connect a clean, oil-free, regulated 80 psi (5.5 bar) air line to the Air Solenoid's Nylon Quick Connect using a 5/32 nylon airline.

General Wiring Installations Notes:

Wire Installations – Preventing Interference or Damage
When installing communication wires, be sure to avoid any sources of interference such as vacuum loader lines (discharged static), high voltage lines and transformers and florescent lights. You should avoid these sources by a distance of a foot or more so that communication is not disrupted by interference and sensitive electronic components are not damaged.

To access the circuit board for the wiring installation, remove the 6 screws located on the face of the Extruder Speed Control or Take-off Speed Control box.

If the wire installation into the Speed Control boxes will have an exposed wire, use of a cable strain relief is recommended. Two sizes of strain relief may be provided depending on your application, one for single wire installations and one for 2 wire installations. Two hole locations are provided in boxes, one at the base and one on the back.

When installing wires onto the circuit board within the control boxes, strip the outer wire insulation back approximately 2.5 inches (63mm) and the inner individual wire insulation back approximately ¼ inch (6mm) per wire.

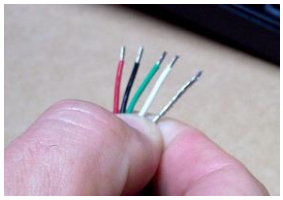

This recommendation is to prevent wires from shorting with each other or internal electronic components.

Each application (Extrusion Control, Yield-X, Yield T or Yield D) has a unique wiring diagram in the installation section of this manual.

Refer to the provided wiring diagrams within this manual for exact wire locations for your application.

Use of a 24-volt power supply. If you are using the 24-volt power supply to power your control boxe(s), follow the wiring diagram provided with the 24 volt power supply for specific wire attachment locations. For demonstration purposes the images in this manual are wired with the Brown wire attached to the +24 volt and the blue wire attached to the common.

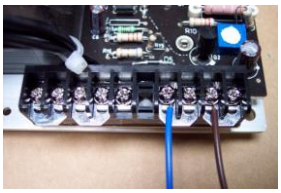

Wiring Consideration

The wiring of your communication lines is very important for reliable operation. To minimize problems, consider the following:

1. Communication lines are **low voltage** lines. Be sure that these lines are not bundled to any high voltage lines. If you run them in conduit, do not run high and low voltage lines together.

2. It is not necessary to run this wire in conduit. If you do run cables without conduit, do not wire tie these lines to material conveying lines or other conduit containing high voltage or high amperage electrical lines.

3. Keep all **communication lines** away from all **vacuum loader-conveying lines**. Conveying plastic produces **extreme** static charges. A communication line, even in conduit that runs next to a vacuum line can introduce extreme static pulses into the processor. Keep these lines **separated** from conveying lines.

XC-1 – Extrusion Control Installation

The XC-1 kit involves the installation of the following components:

- LineMaster Controller
- Extruder Drive Control
- Cabling
- Optional 24 volt power supply

Install the XCD-X Extruder Drive Control in your desired location.

Remove the front cover from the Extruder Drive Control box (see General Installations Notes).

Run the Controller Cable from the LineMaster Controller's 7-pin receptacle to the Extruder Drive Control. The un-terminated side of the cable will be on the Extruder Drive Control side and should be cut to length leaving enough cable to run into the Extruder Drive Control box.

Strip back approximately 2 ½ inches of the outer shielding from the un-terminated side of the cable to expose the 5 wires. Run the Controller Cable into the Extruder Drive Control box, through one of the two hole locations on the Control box. Use a stain relief if necessary. Strip back approximately ¼ inch (6mm) per wire and install into the terminal strip (see wiring diagram on the following page for exact wire locations).

Run the Extruder Drive wire into the Extruder Drive Control box and install into the specified terminal strip as indicated in the wiring diagram.

If you are using the optional 24 volt power supply to power the Extruder Drive Control, install the power supply in a desired location. Run a length of shielded, 2-conductor 18 gauge wire from the power supply to the Extruder Drive Control and wire according to the XC-1 Extrusion Control Wiring Diagram.

If the Extruder Drive Control will be powered by your 0-10 volt Extruder Drive Cable, REMOVE the jumper between J14 and J15 located on the On the Extruder Speed Control Interface circuit board.

If the Extruder Drive Control will be powered by the optional 24 volt power supply (to provide an isolated power source), DO NOT remove the jumper between J14 and J15 located on the On the Extruder Speed Control Interface circuit board.

XC-1 – Extrusion Control Wiring Diagrams

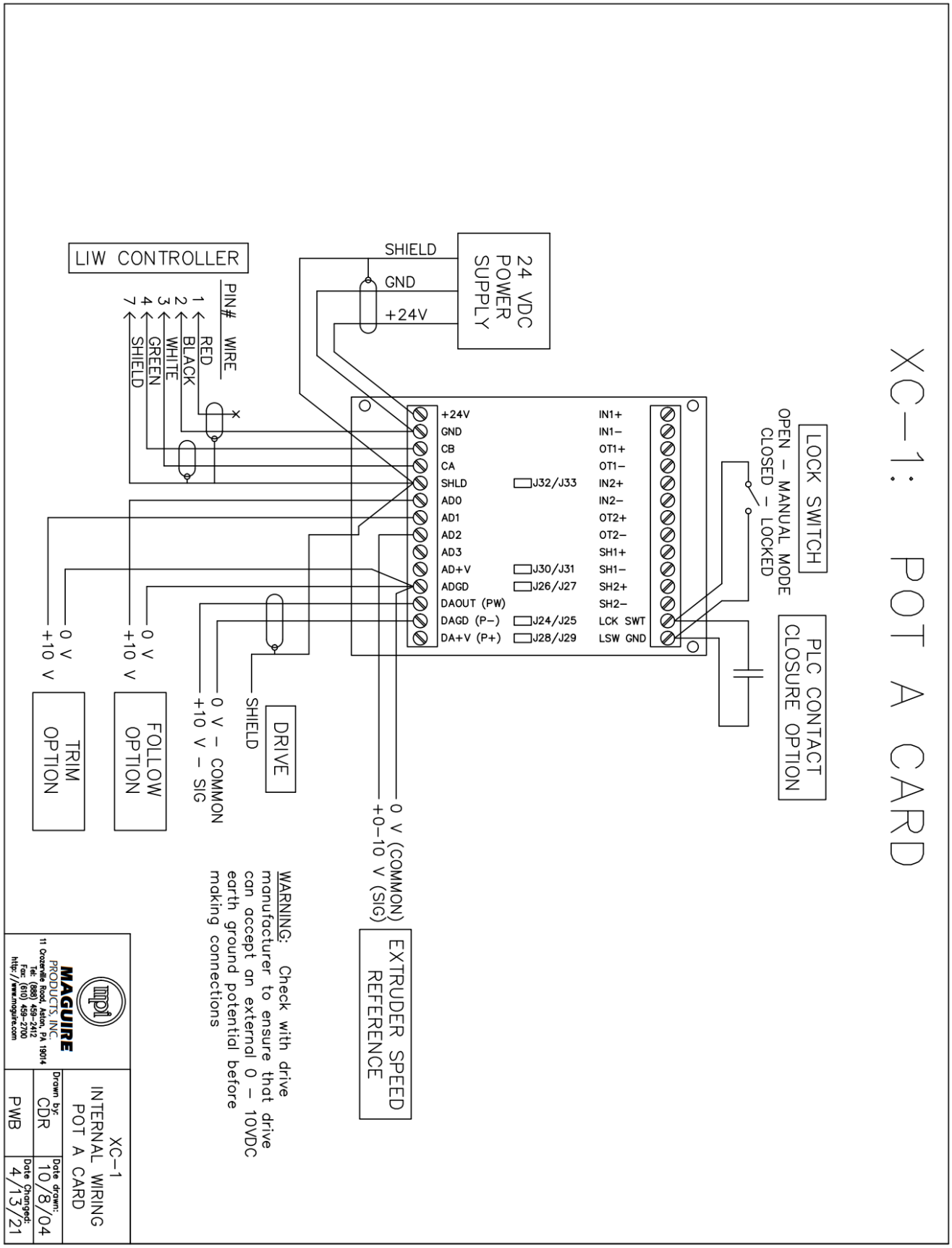

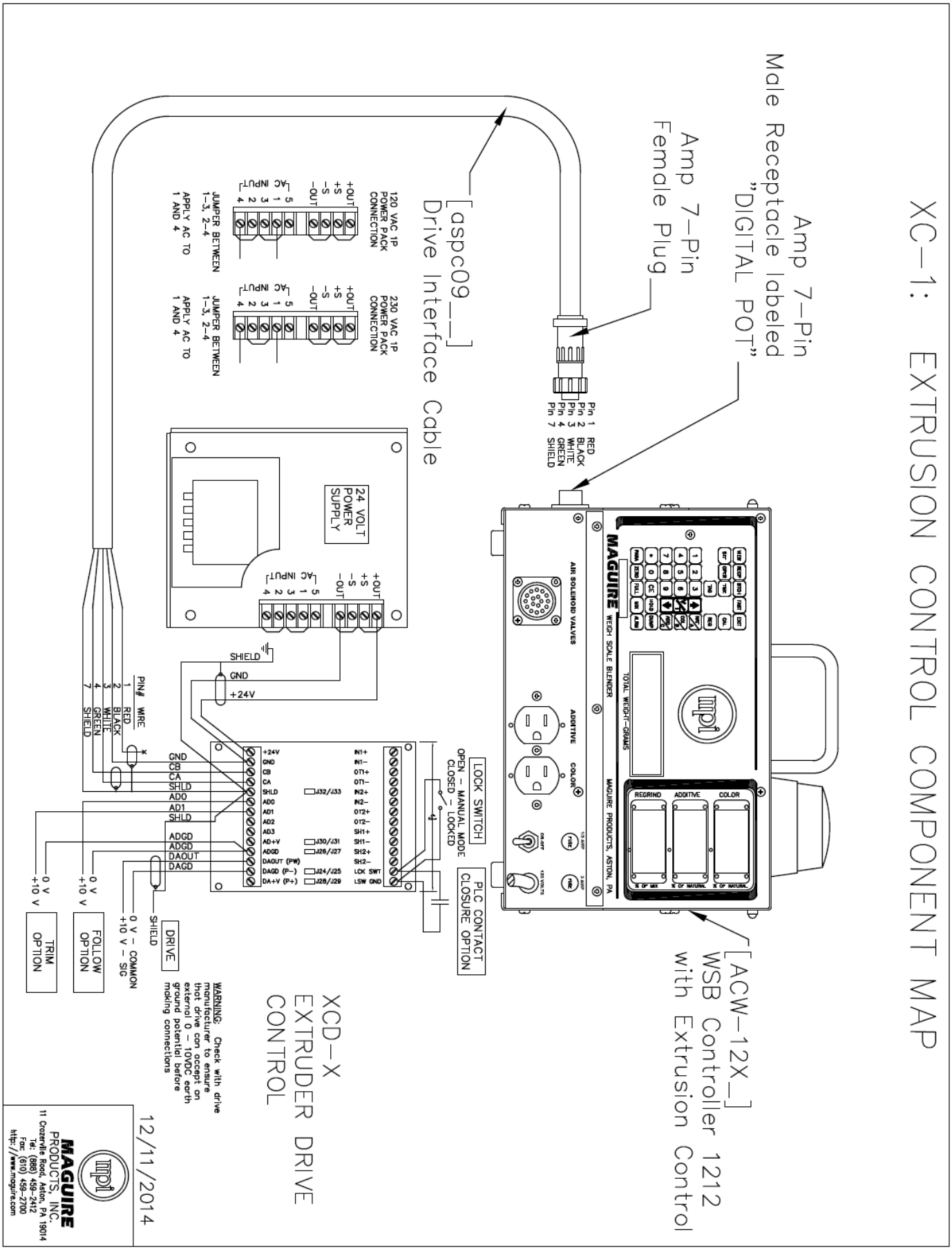
XC-1: EXTRUSION CONTROL COMPONENT MAP
Amp 7-Pin Male Receptacle labeled "DIGITAL POT"
Amp 7-Pin Female Plug
[aspc09__] Drive Interface Cable
[ACW-12X_] WSB Controller 1212 with Extrusion Control
Pin 1 RED
Pin 2 BLACK
Pin 3 WHITE
Pin 4 GREEN
Pin 7 SHIELD
120 VAC 1P POWER PACK CONNECTION
230 VAC 1P POWER PACK CONNECTION
+OUT
+S
-S
-OUT
AC INPUT
JUMPER BETWEEN 1-3, 2-4
APPLY AC TO 1 AND 4
24 VOLT POWER SUPPLY
SHIELD
GND
+24V
PIN# WIRE
1 RED
2 BLACK
3 WHITE
4 GREEN
7 SHIELD
GND
CB
CA
SHLD
ADO
AD1
SHLD
ADGD
ADGD
DAOUT
DAGD
+24V
GND
CB
CA
SHLD
ADO
AD1
AD2
AD3
AD+V
ADGD
DAOUT (PW)
DAGD (P-)
DA+V (P+)
J32/J33
J30/J31
J26/J27
J24/J25
J28/J29
IN1+
IN1-
OT1+
OT1-
IN2+
IN2-
OT2+
OT2-
SH1+
SH1-
SH2+
SH2-
LCK SWT
LSW GND
LOCK SWITCH
OPEN - MANUAL MODE
CLOSED - LOCKED
PLC CONTACT CLOSURE OPTION
0 V
+10 V
TRIM OPTION
FOLLOW OPTION
0 V - COMMON
+10 V - SIG
SHIELD
DRIVE
WARNING: Check with drive manufacturer to ensure that drive can accept an external 0 - 10VDC earth ground potential before making connections
XCD-X EXTRUDER DRIVE CONTROL
12/11/2014
MAGUIRE PRODUCTS, INC.
11 Crozerville Road, Aston, PA 19014
Tel: (888) 459-2412
Fax: (610) 459-2700
http://www.maguire.com
MAGUIRE
WEIGH SCALE BLENDER
MAGUIRE PRODUCTS, ASTON, PA
TOTAL WEIGHT-GRAMS
AIR SOLENOID VALVES
ADDITIVE
COLOR
REGRIND
ADDITIVE
COLOR
% OF MIX
% OF NATURAL
% OF NATURAL

XC-2 - Yield Control X or Yield Control T Installation

The XC-2 kit involves the installation of the following components:

- LineMaster Controller
- Extruder Drive Control
- Take-Off Drive Control
- Control Cabling
- Mounting hardware
- 24 Volt Power Supply
- Encoder, Encoder Wheel (12 inch circumference)
- Encoder Cable

Mount the XCD-X Extruder Drive Control in your desired location.

Mount the XCD-T Take-Off Drive Control in your desired location.

Remove the front cover from the Extruder Drive Control (see General Installations Notes).

Run the Controller Cable from the LineMaster Controller's 7-pin receptacle to the Extruder Drive Control box. The un-terminated side of the cable will be on the Extruder Drive Control box side and should be cut to length leaving enough cable to run into the Extruder Drive Control box and to the terminal strip.

Strip back approximately 2 ½ inches of the outer shielding from the un-terminated side of the cable to expose the 5 wires. Run the Controller Cable into the Extruder Speed Control Interface, through one of the two hole locations on the Control box. Use a stain relief if necessary. Strip back approximately ¼ inch (6mm) per wire and install into the terminal strip (see wiring diagram on the following page for exact wire locations).

Install the Encoder on the shaft of the haul off. Run the Encoder signal cable from the Encoder back to the XCD-X Extruder Drive Control. At the XCD-X Extruder Drive Control wire the Encoder signal cable according to the wiring diagram on the next page.

Run the Extruder Drive wire into the Extruder Speed Control Interface box and install into the specified terminal strip as indicated in the wiring diagram.

If you are using the optional 24 volt power supply to power the Extruder Speed Control Interface, install the power supply in a desired location. Run a length of shielded, 2-conductor 18 gauge wire (not included in kit) from the power supply to the Extruder Speed Control Interface and wire according to the XC-1 Extrusion Control Wiring Diagram.

If the Extruder Speed Control Interface will be powered by your 0-10 volt Extruder Drive Cable, REMOVE the jumper between J14 and J15 located on the On the Extruder Speed Control Interface circuit board.

If the Extruder Speed Control Interface will be powered by the optional 24 volt power supply (to provide an isolated power source), DO NOT remove the jumper between J14 and J15 located on the On the Extruder Speed Control Interface circuit board.

XC-2 - Yield Control X or Yield Control T Wiring Diagrams

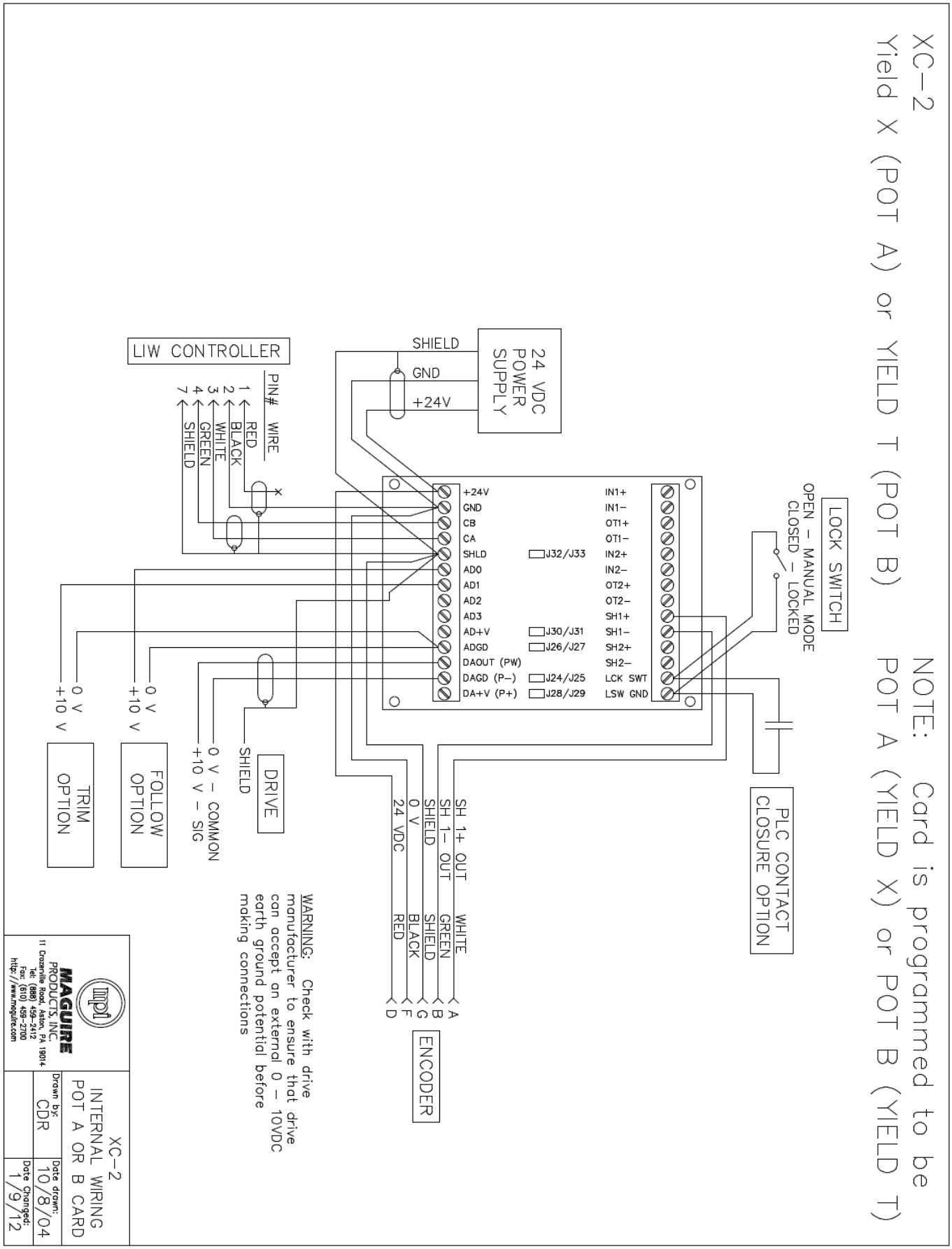

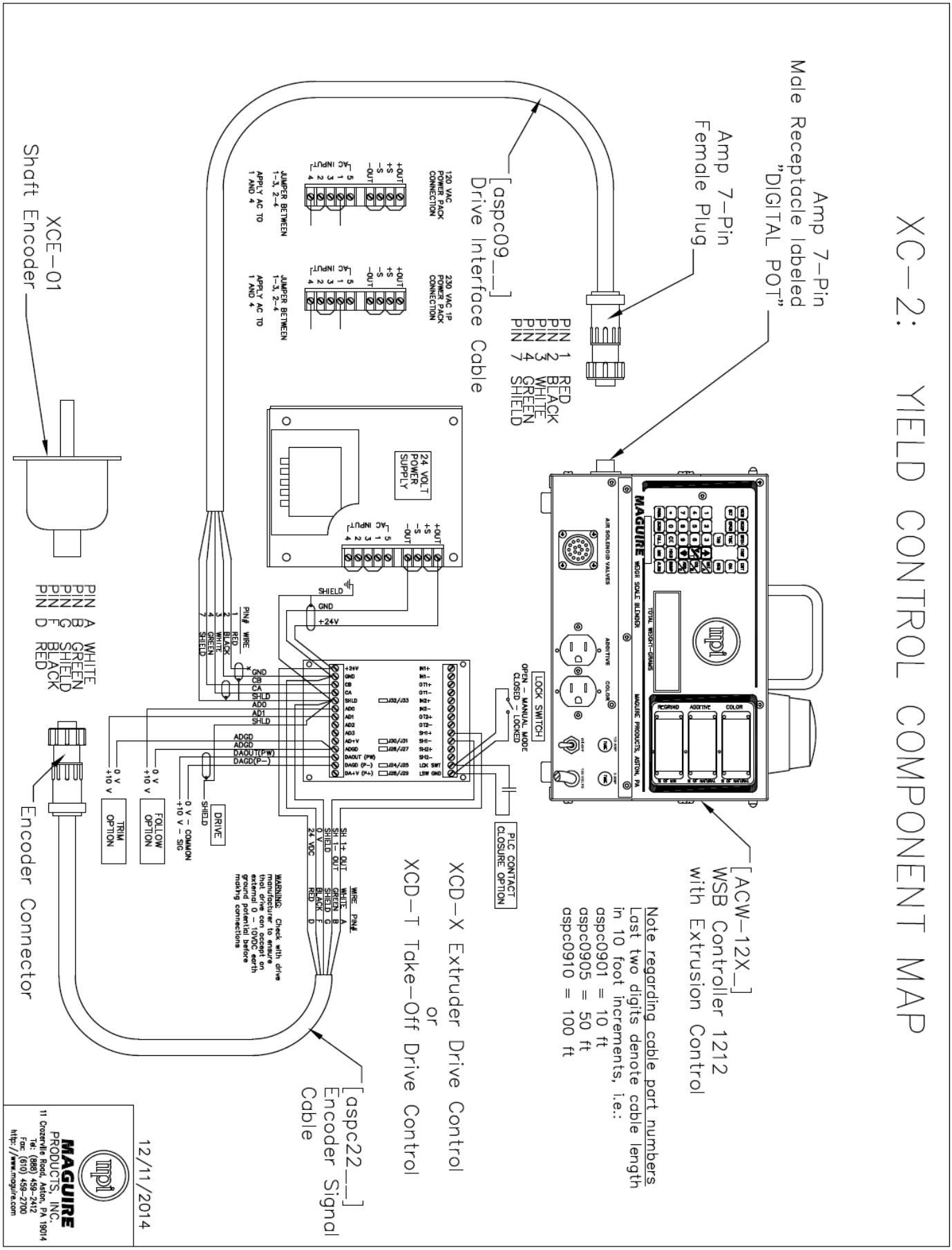
XC-2: YIELD CONTROL COMPONENT MAP
Amp 7-Pin Male Receptacle labeled "DIGITAL POT"
Amp 7-Pin Female Plug
[aspc09__] Drive Interface Cable
PIN 1 RED
PIN 2 BLACK
PIN 3 WHITE
PIN 4 GREEN
PIN 7 SHIELD
120 VAC POWER PACK CONNECTION
230 VAC 1P POWER PACK CONNECTION
JUMPER BETWEEN 1-3, 2-4
APPLY AC TO 1 AND 4
24 VOLT POWER SUPPLY
XCE-01 Shaft Encoder
PIN A WHITE
PIN B GREEN
PIN G SHIELD
PIN F BLACK
PIN D RED
LOCK SWITCH
OPEN - MANUAL MODE
CLOSED - LOCKED
PLC CONTACT CLOSURE OPTION
DRIVE
FOLLOW OPTION
TRIM OPTION
Encoder Connector
XCD-X Extruder Drive Control
or
XCD-T Take-Off Drive Control
[aspc22__] Encoder Signal Cable
[ACW-12X_] WSB Controller 1212 with Extrusion Control
Note regarding cable part numbers
Last two digits denote cable length in 10 foot increments, i.e.:
aspc0901 = 10 ft
aspc0905 = 50 ft
aspc0910 = 100 ft
12/11/2014
MAGUIRE PRODUCTS, INC.
11 Crozerville Road, Aston, PA 19014
Tel: (888) 459-2412
Fax: (610) 459-2700
http://www.maguire.com

XC-3 – Yield D Installation

The XC-3 kit involves the installation of the following components:

- LineMaster Controller
- Extruder Speed Control Interface
- Take-off Speed Control Interface
- LineMaster Cabling
- Mounting hardware
- 24 Volt Power Supply
- Encoder, Encoder Wheel (12 inch circumference)
- Encoder Cable
- G2 Software Cabling
- Installation of G2 Software on dedicated PC (PC not included with kit)

Mount the XCD-X Extruder Drive Control in your desired location.

Mount the XCD-T Take-Off Drive Control in your desired location.

Remove the front cover from the Extruder Drive Control (see General Installations Notes).

Run the Controller Cable from the LineMaster Controller's 7-pin receptacle to the Extruder Drive Control box. The un-terminated side of the cable will be on the Extruder Drive Control box side and should be cut to length leaving enough cable to run into the Extruder Drive Control box and to the terminal strip.

Strip back approximately 2 ½ inches of the outer shielding from the un-terminated side of the cable to expose the 5 wires. Run the Controller Cable into the Extruder Speed Control Interface, through one of the two hole locations on the Control box. Use a stain relief if necessary. Strip back approximately ¼ inch (6mm) per wire and install into the terminal strip (see wiring diagram on the following page for exact wire locations).

Install the Encoder on the shaft of the haul off. Run the Encoder signal cable from the Encoder back to the XCD-X Extruder Drive Control. At the XCD-X Extruder Drive Control wire the Encoder signal cable according to the wiring diagram on the next page.

Run the Extruder Drive wire into the Extruder Speed Control Interface box and install into the specified terminal strip as indicated in the wiring diagram.

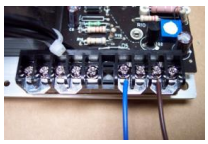

If you are using the optional 24 volt power supply to power the Extruder Speed Control Interface, install the power supply in a desired location. Run a length of shielded, 2-conductor 18 gauge wire (not included in kit) from the power supply to the Extruder Speed Control Interface and wire according to the XC-1 Extrusion Control Wiring Diagram.

If the Extruder Speed Control Interface will be powered by your 0-10 volt Extruder Drive Cable, REMOVE the jumper between J14 and J15 located on the On the Extruder Speed Control Interface circuit board.

If the Extruder Speed Control Interface will be powered by the optional 24 volt power supply (to provide an isolated power source), DO NOT remove the jumper between J14 and J15 located on the On the Extruder Speed Control Interface circuit board.

G2 Software Cabling

The G2 software is designed to communicate with LIW Controllers and control the LineMaster equipment. Communication with the LIW Controller can be done using serial communication lines or Ethernet communication lines. Ethernet is the recommended method. The LineMaster controller has both an Ethernet port and a serial port for communication purposes. Decide whether you want to communicate over Ethernet or serial and read the following brief outline for installing communication lines.

The basic G2 Software Starter kit will include a G2-SA (serial signal amplifier and security key) or G2-SA-E (USB security key).

The following diagrams provide an overview of typical serial and Ethernet communication networks. With Ethernet, standard, off the shelf Ethernet components can be used. Maguire Products does not supply Ethernet components. With serial networks, Maguire Products can supply pre-terminated standard lengths of serial cable and connector boxes. Please speak to a Maguire sales person or review the Pre-sales Guide on our website for more information. http://www.maguire.com/page.php/g2manuals.htm

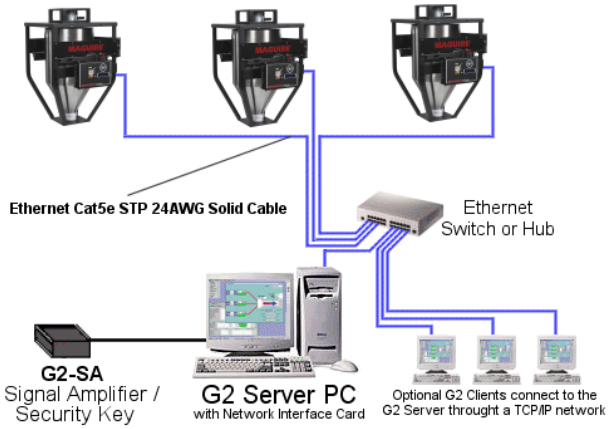

Ethernet application

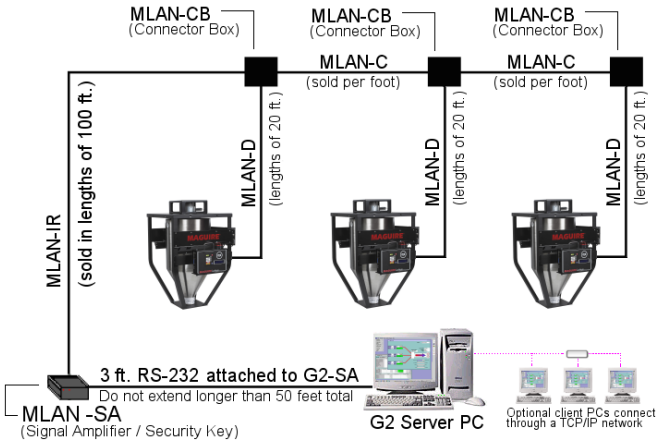

Serial applications

XC-3 – Yield D Wiring Diagrams

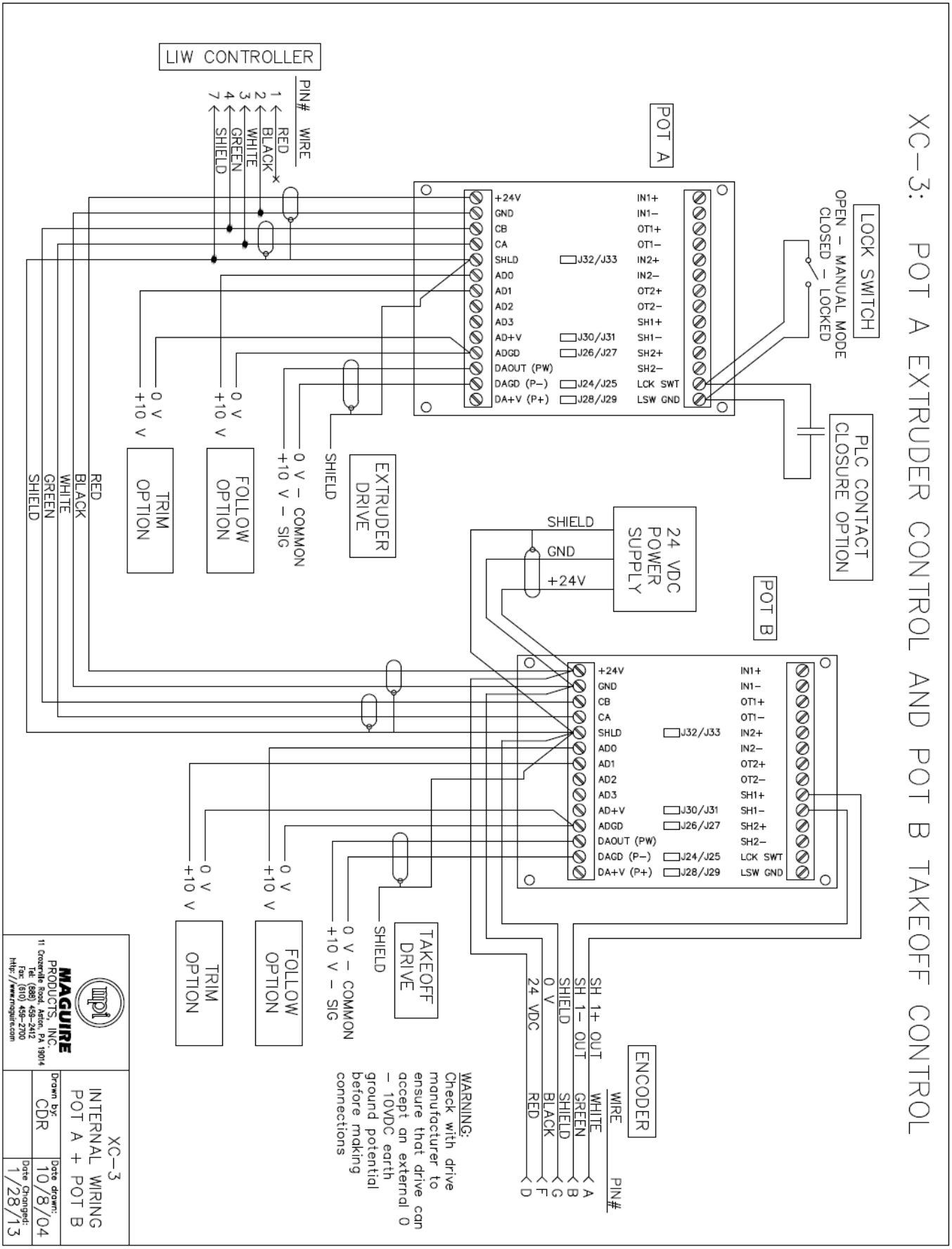

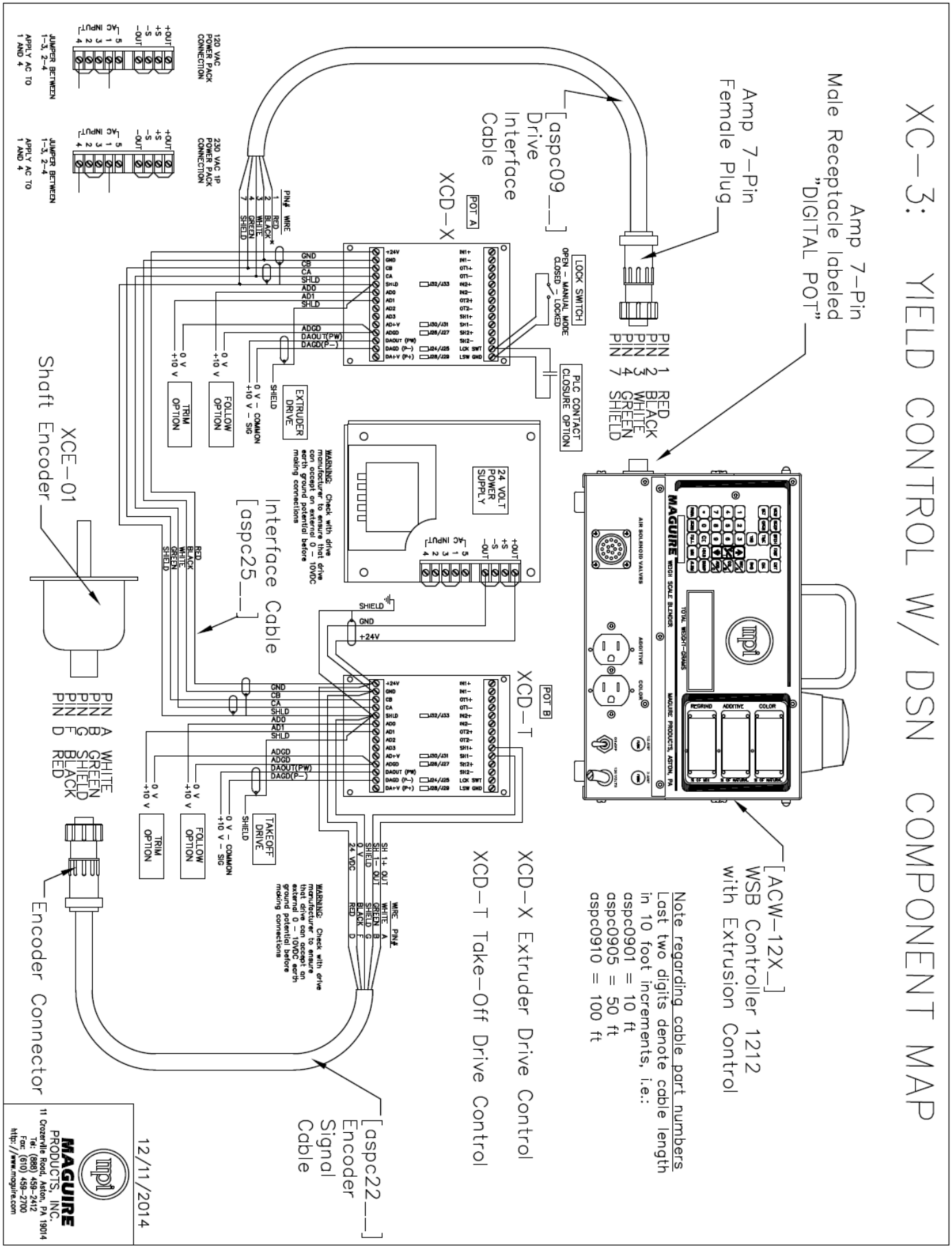
XC-3: YIELD CONTROL W/ DSN COMPONENT MAP
Amp 7-Pin Male Receptacle labeled "DIGITAL POT"
Amp 7-Pin Female Plug
[aspc09__] Drive Interface Cable
XCD-X
POT A
LOCK SWITCH
OPEN - MANUAL MODE
CLOSED - LOCKED
PLC CONTACT CLOSURE OPTION
PIN 1 RED
PIN 2 BLACK
PIN 3 WHITE
PIN 4 GREEN
PIN 7 SHIELD
24 VOLT POWER SUPPLY
EXTRUDER DRIVE
FOLLOW OPTION
TRIM OPTION
WARNING: Check with drive manufacturer to ensure that drive can accept an external 0 - 10VDC earth ground potential before making connections
Interface Cable [aspc25__]
XCE-01 Shaft Encoder
XCD-T
POT B
TAKEOFF DRIVE
PIN A WHITE
PIN B GREEN
PIN G SHIELD
PIN F BLACK
PIN D RED
Encoder Connector
[aspc22__] Encoder Signal Cable
XCD-X Extruder Drive Control
XCD-T Take-Off Drive Control
[ACW-12X_] WSB Controller 1212 with Extrusion Control
Note regarding cable part numbers
Last two digits denote cable length in 10 foot increments, i.e.:
aspc0901 = 10 ft
aspc0905 = 50 ft
aspc0910 = 100 ft
120 VAC POWER PACK CONNECTION
230 VAC 1P POWER PACK CONNECTION
JUMPER BETWEEN 1-3, 2-4 APPLY AC TO 1 AND 4
12/11/2014
MAGUIRE PRODUCTS, INC.
11 Crozerville Road, Aston, PA 19014
Tel: (888) 459-2412
Fax: (610) 459-2700
http://www.maguire.com

LineMaster™ Operation

Standalone Operation – Standalone operation uses the hardware only to control the equipment.

G2 Software Operation – G2 software operation uses both the hardware and G2 software to control the equipment.

Standalone Operation

XC-1 Throughput Control

XC-1 Throughput Control is where control is maintained by monitoring the throughput of the process and regulating the extruder speed. The XCC controller utilizing the consumption data from the LIW hopper and communicates with the XCD-X Extruder Drive Speed Control to adjust the extruder speed via a 0-10 volt signal to maintain the throughput target.

Linemaster XCC Controller

XCD-X Extruder Drive Speed Control

XC-1 Startup

Before startup, make sure material is available at the fill valve of the Loss-in-weight hopper.

1. With the **LineMaster Extruder Speed Control** in the **MANUAL** position, turn main power of **LineMaster (XCC) Controller ON**

   Display will read: **0.0 K/h EXTRUSION UNLOCKED**

2. At the **LineMaster Extruder Speed Control** begin increasing the voltage by rotating the **ADJUST** pot clockwise. Rotate **ADJUST** pot until desired RPM (voltage) is attained. As material begins to flow through the Loss-in-weight hopper and into the extruder, an actual rate of throughput is displayed.

3. When the desired rate of flow is attained, the **LineMaster Extruder Speed Control** can be put into the **LOCK** position to maintain the current rate of throughput. In LOCK position, automatic adjustments to the (0-10v) extruder voltage are made by the LineMaster (XCC) Controller to maintain the locked rate of throughput.

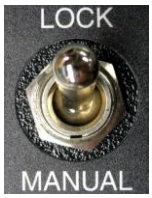

Adjustments

When in the locked mode, manual adjustments to the rate of throughput can be entered through the **LineMaster (XCC) Controller.** Adjustments can be made two ways:

Incremental Adjustments

Incremental adjustments are made using the up and down arrows on the keypad of the **LineMaster (XCC) Controller**. Press and release once of the arrow keys increments up or down by one tenth of a pound or kilogram. Pressing and holding of the arrow keys will rapidly increase or decease the value. Incremental entries can only be made in the locked mode.

Keypad Entry

Keypad adjustments are made using the keypad button located above the up and down arrows on the keypad. Pressing the keypad button, will display:

```
                1880.2 g
ENTER TARGET    _ _ _ _ _
```

Enter the value of throughput in pounds or kilograms using all 5 digits (the last digit is in 10ths). Be sure to include any leading zeros (example: 330.0 pounds/hour would be entered as 03300.) Keypad entries can only be entered in the locked mode.

LOCK Options

On the **LineMaster (XCC) Controller** keypad, between the up and down arrows, is a **LOCK** key. This **LOCK** key can be used to Lock throughput, overriding the LineMaster Extruder Speed Control MANUAL / LOCK switch. To use the keypad LOCK option, the LTP parameter in the **LineMaster (XCC) Controller** must be set to LTP 1xxxx, where the first digit in this parameter is set to a 1. Setting the LTP parameter to use this option will de-activate (and ignore) the LineMaster Extruder Speed Control MANUAL / LOCK switch.

Shutdown

Normal Shutdown Procedure – First switch the **LineMaster Extruder Speed Control** into **MANUAL** position. Then rotate the **ADJUST** pot counterclockwise (at your desired rate of decrease), eventually reaching zero volts (zero RPM).

XC-2 - Yield Control X or Yield Control T

XC-2 offers the ability to maintain a product's weight per length (lb/ft or gm/M) by monitoring the process throughput against the line speed. An XCE Digital Encoder mounted on a take-off device monitors the line speed. Control is accomplished by adjusting either the extruder speed with a XCD-X Drive Speed Control Module by referencing the manually controlled line speed or controlling the take-off speed with a XCD-T Line Speed Control Module from a manually controlled extruder.

Linemaster XCC Controller

Encoder, Encoder Wheel

XCD-X Extruder Drive Speed Control

XCD-T Take-off Drive Speed Control

XC-2 has two options for control of grams per length.

YLDX – The Take-off drive speed is controlled manually. When in lock mode, **LineMaster Extruder Speed Control** will adjust the extruder automatically to follow the line speed to maintain yield.

YLDT – The Extruder drive speed is controlled manually. When in lock mode, **LineMaster Take-off Speed Control** will adjust the take-off automatically to follow the Extruder speed to maintain yield.

XC-2 Startup

Before startup, make sure material is available at the fill valve of the Loss-in-weight hopper.

YLDX Mode

1. With the **LineMaster Extruder Speed Control** in the **MANUAL** position, turn main power of **LineMaster (XCC) Controller ON**

   Display will read:

	0.0 g/l
YLDX	**UNLOCKED**

2. At the **LineMaster Extruder Speed Control** begin increasing the voltage by rotating the **ADJUST** pot clockwise. Rotate **ADJUST** pot until desired RPM (voltage) is attained. Material begins to flow through the Loss-in-weight hopper and into the extruder. Once the take-off is running and rotating the **Encoder**, producing feedback to the **LineMaster (XCC) Controller**, an actual rate of grams per length (g/l) is displayed.

3. When the desired rate of flow is attained, the **LineMaster Extruder Speed Control** can be put into the **LOCK** position to maintain the current rate of grams per length (g/l). In LOCK position, automatic adjustments to the (0-10v) extruder voltage are made by the LineMaster (XCC) Controller to maintain the locked rate of grams per length (g/l).

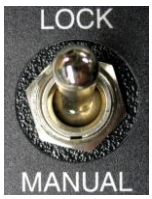

Adjustments

When in the locked mode, manual adjustments to the rate of grams per length (g/l) can be entered through the **LineMaster (XCC) Controller.** Adjustments can be made two ways:

Incremental Adjustments

Incremental adjustments are made using the up and down arrows on the keypad of the **LineMaster (XCC) Controller**. Press and release once of the arrow keys increments up or down by one tenth of a gram. Pressing and holding of the arrow keys will rapidly increase or decease the value. Incremental entries can only be made in the locked mode.

Keypad Entry

Keypad adjustments are made using the keypad button located above the up and down arrows on the keypad (pic). Pressing the keypad button, will display: ENTER TARGET _ _ _ _ _.

Enter the value of grams per length (g/l) using all 5 digits (the last digit is in 10ths). Be sure to include any leading zeros (example: 120.0 grams per length (g/l) would be entered as 01200.) Keypad entries can only be entered in the locked mode.

LOCK Options

On the **LineMaster (XCC) Controller** keypad, between the up and down arrows, is a **LOCK** key. This **LOCK** key can be used to Lock grams per length (g/l), overriding the LineMaster Extruder Speed Control MANUAL / LOCK switch. To use the keypad LOCK option, the LTP parameter in the **LineMaster (XCC) Controller** must be set to LTP 1xxxx, where the first digit in this parameter is set to a 1. Setting the LTP parameter to use this option will de-activate (and ignore) the LineMaster Extruder Speed Control MANUAL / LOCK switch.

Shutdown

Normal Shutdown Procedure – First switch the **LineMaster Extruder Speed Control** into **MANUAL** position. Then rotate the **ADJUST** pot counterclockwise (at your desired rate of decrease), eventually reaching zero volts (zero RPM).

YLDT Mode

4. With the **LineMaster Take-off Speed Control** in the **MANUAL** position, turn main power of **LineMaster (XCC) Controller ON.**

   Display will read:

```
                0.0 g/l
YLDT          UNLOCKED
```

5. Once the Extruder is running, material will start to flow through the Loss-in-weight hopper. At the **LineMaster Take-off Speed Control** begin increasing the voltage by rotating the **ADJUST** pot clockwise. Rotate **ADJUST** pot until desired **line speed** is attained. Once the take-off is running and rotating the **Encoder**, producing feedback to the **LineMaster (XCC) Controller**, an actual rate of grams per length (g/l) is displayed on the **LineMaster (XCC) Controller**.

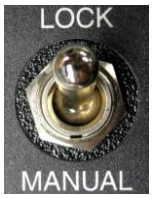

6. When the desired rate of flow is attained, the **LineMaster Take-off Speed Control** can be put into the **LOCK** position to maintain the current rate of grams per length (g/l). In LOCK position, automatic adjustments to the (0-10v) Take-off voltage are made by the **LineMaster (XCC) Controller** to maintain the locked rate of grams per length (g/l).

Adjustments

When in the locked mode, manual adjustments to the rate of grams per length (g/l) can be entered through the **LineMaster (XCC) Controller.** Adjustments can be made two ways:

Incremental Adjustments

Incremental adjustments are made using the up and down arrows on the keypad of the **LineMaster (XCC) Controller**. Press and release once of the arrow keys increments up or down by one tenth of a gram. Pressing and holding of the arrow keys will rapidly increase or decease the value. Incremental entries can only be made in the locked mode.

Keypad Entry

Keypad adjustments are made using the keypad button located above the up and down arrows on the keypad (pic). Pressing the keypad button, will display: ENTER TARGET _ _ _ _ _. Enter the value of grams per length (g/l) using all 5 digits (the last digit is in 10ths). Be sure to include any leading zeros (example: 120.0 grams per length (g/l) would be entered as 01200.) Keypad entries can only be entered in the locked mode.

LOCK Options

On the **LineMaster (XCC) Controller** keypad, between the up and down arrows, is a **LOCK** key. This **LOCK** key can be used to Lock grams per length (g/l), overriding the LineMaster Extruder Speed Control MANUAL / LOCK switch. To use the keypad LOCK option, the LTP parameter in the **LineMaster (XCC) Controller** must be set to LTP 1xxxx, where the first digit in this parameter is set to a 1. Setting the LTP parameter to use this option will de-activate (and ignore) the LineMaster Extruder Speed Control MANUAL / LOCK switch.

Shutdown

Normal Shutdown Procedure – First switch the **LineMaster Take-off Speed Control** into **MANUAL** position. Then rotate the **ADJUST** pot counterclockwise (at your desired rate of decrease), eventually reaching zero line speed.

XC-3 – Yield D

XC-3 Multi-Layer Yield Control via Computer

XC-3 provides complete weight per length control (lb/ft or gm/M), via simultaneous control of the extruder and take-off.

Controllers are connected via serial or Ethernet using the XC Software. Gauge or thickness control can be initiated in set-up utilizing data of the materials or blend specific gravity.

XC-3 (Yield-D) requires the G2 Software as the link between the layers. The following section is an overview of the G2 software and will explain the use of G2's Yield Screen for XC-3 operation.

Linemaster XCC Controller

Encoder, Encoder Wheel

XCD-X Extruder Drive Speed Control

Take-Off Speed Control

Maguire G2 Software Startup Guide

Gravimetric Gateway® LineMaster™

The G2 Software is a stand-alone communication, control and data collection software package for use with the Maguire Loss-In-Weight (LIW), Maguire Weigh Scale Blenders (WSB, WSD, WST), and the Maguire Gravimetric Feeders (MGF). The G2 software installs on a Windows Operating System and can communicate over Ethernet or MLAN (RS-232).

The G2 Software consists of two programs, the G2 Server and the G2 Client. The G2 Server should be installed on a dedicated computer and the G2 Server program must be running in order to collect totals and send commands from the WSB, MGF or LIW machines. The G2 Client is installed on the same computer and is the human interface with the program, consisting of the control and reporting screens. The G2 Client can also be installed on other computers located on the same network. These remote clients connect to the G2 Server and offer remote access to the data as well as control.

Gravimetric Gateway® Server (G2 Server)

The Gravimetric Gateway® Server, G2 Server, is the name we give to the server software written exclusively for the MAGUIRE Weigh Scale Blenders. The G2 Server enables you to communicate directly from the server with one or more WSB controllers or connect remotely from anywhere over a TCP/IP network using the Gravimetric Gateway® Client Software. The Gravimetric Gateway® Server provides two-way communication between the server and the MLAN network of blenders through downloading and constant retrieval of information from WSB controllers for:

PRECISE WEIGHT of all materials processed
SETTINGS - Sending and retrieval
EXTRUSION CONTROL - Monitoring, Controlling and Recipe Downloads
LINE RECIPE MANAGEMENT - Creating, Downloading
RECIPE numbers
WORK ORDER numbers
OPERATOR numbers

The G2 Server organizes and tracks your material usage, allowing you to gather accurate information according to the following factors:

- TIME
- DAY
- BLENDER
- WORK ORDER
- OPERATOR
- RECIPE
- LINE
- LINE RECIPE

The G2 Server allows you to maintain a **raw materials** database, and then build recipes from this database for all of the products you manufacture.

The G2 Server enables the user to build lines of WSBs, LIWs or MGFs as well as line recipes for multiple simultaneous recipe downloads and material usage based on lines.

The G2 Server is **menu** driven, and very user friendly. The package is ready to go with very little training or start up time required.

The G2 Server allows for multiple remote clients to connect to the server simultaneously for controlling, monitoring and accessing data from the network of blenders. These connections can be controlled by several levels of security limiting access to critical data.

Communication Network

The communication network to the Maguire WSB, LIW, MGF controllers can be serial or Ethernet depending on how they are equipped. WSB Controllers produced from 1992 to 2006 (6811 processor, red display) are equipped with serial only. These controllers can be retrofitted with an Ethernet to serial converter (part # G2-ES) if an Ethernet communication network will be used. WSB Controllers produced from 2007 to present (12-12 processor, blue display) have both serial and Ethernet. Touchscreen Controllers have Ethernet only.

For serial installations, see the Serial MLAN Wiring Diagram. Ethernet installations use the standard Ethernet wiring and configuration.

Both Serial and Ethernet networks can be used in the same installation. Ethernet blenders will be on the Ethernet network while serial blenders will communicate through the G2-SA signal amplifier. Other network installation option exist including supplemental serial signal extenders (MLAN-SE), multi-leg serial using Ethernet adapters G2-ES-11), and wireless Ethernet adapters (wireless typically not recommended).

Serial network example

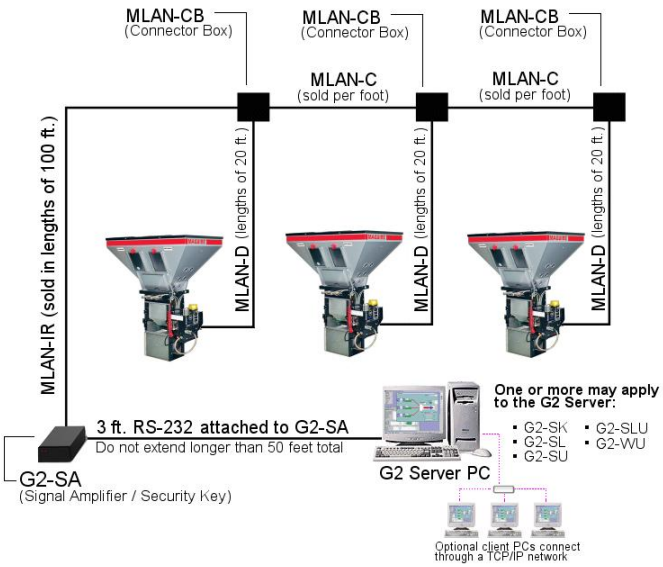

Ethernet network example

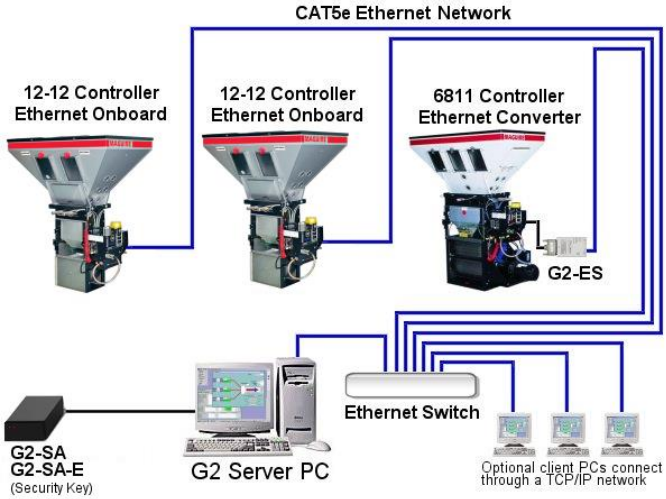

G2 Software Setup Instructions

Covered in this Section:

- G2 Software Installation and software structure
- Security Key for Licensed Mode
- G2 Server Start Up
- G2 Client Start Up
- Adding your Maguire Weigh Scale Blenders to the software (WSB, LIW, MGF)
- Serial Communication Network Setup
- Ethernet Communication Network Setup

G2 Software Installation

1. From the download or installation CD or USB, run **G2-5.3.6-FULL-Setup.exe** or the version that you have.
2. Choose the install language.
3. Click Next, review/accept the License Agreement, click Next.
4. Review the G2 5.0 installation notes. Click Next.
5. Select the G2 installation folder. c:\g2 is recommended. Click Next.
6. Click Next to acknowledge the program shortcuts location.
7. Choose if you want desktop icons, click Next, Then Install.
8. Java Installation: The next step starts the Java Installer. This installation is necessary to run G2 version 5.0 or later. Click Install to continue.
9. When the Java Installer has successfully completed, Click the Close button.
10. Review the Post Install notes. These notes are available in the G2 installation folder in the file: Post-Install.txt for later review. Click Next, then Finish. The installation is complete.
11. For Client only installations (G2 Server is located on a different computer), delete the G2 Server shortcut in the start menu and/or desktop.

G2 installed files and database location

G2 is installed in the c:\g2 folder by default. All G2 related files excluding the Java installation files and the start menu shortcuts are contained in this folder. Databases are in the c:\g2\g2data folder (does not apply to MySQL databases if used with G2). The c:\g2 folder can be backed up or moved intact to another computer.

Security Key Setup - For Licensed Mode

In licensed mode, the G2 software uses a security key to determine the number of blenders licenses to the installation. The security key connection options are:

Serial Security Key - Maguire part # G2-SA or G2-SK. Connects to a COM port (RS-232) on the G2 Server computer. Serves as both the security key in Licensed Mode and a serial signal amplifier to blenders on a serial network. Plug the G2-SA (G2-SK) into an available COM port on the G2 Server Computer.

USB Security Key - Maguire part # G2-SA-E or G2-SK-E. Connects to a USB port on the G2 Server. Serves as the security key in Licensed Mode. For installations using Ethernet only communication to the blenders. The USB security key should be plugged into a USB port on the G2 Server computer. Some operating systems discover the USB TTL-232R device and automatically installs the driver and creates a virtual COM port for security the key connection. Some operating systems do not have the driver and will require that you install the driver separately. The driver is available from Maguire.com (located at the bottom of the page: http://www.maguire.com/page.php/downloads.htm) or on the install CD or USB.

To verify that your driver is installed, open the Device Manager. If the driver is install correctly you will find: *USB Serial Port* under "Ports (COM and LPT)". If the driver is not found, please install the driver separately and check again. If the driver is needed, see http://www.maguire.com/page.php/downloads.htm for TTL-232R Drivers.

G2 Server Start Up

The G2 Server program must be running at all times for the software to collect data from the Blenders. The G2 Server is started with the G2 Server shortcut located in the start menu and/or the desktop. Open the Server by double-clicking the shortcut.

First Time G2 Server Start Up

Choose the Mode

The first time you start the G2 Server, you will need to choose the Mode. Under the Mode in the menu, select the Mode that you want to Start the G2 software in. Choose "Licensed" if you have a security key programmed with the number of blenders you are licensed for. Choose "Lite" for single blender use without a security key. Choose "Demo" for simulated operation.

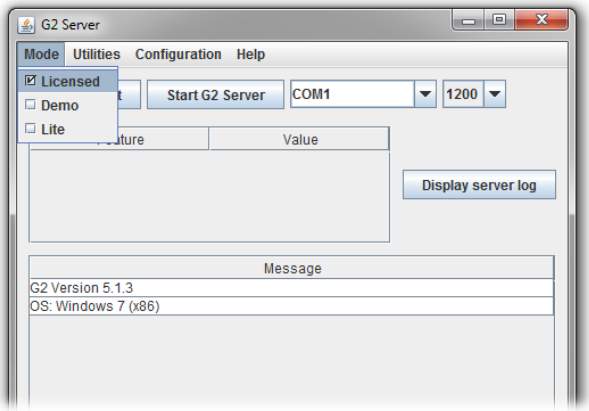

Licensed Mode: Uses security key to determine blender licensing.

Demo Mode - Simulated Operation, connects to Simulated Blenders.

Lite Mode - Allows communication to one blender without licensing.

Select COM Port and Baud Rate

After choosing the mode, select the COM port that the security key is connected to. Typically COM1 for serial/RS-232 use with the G2-SA. USB security key COM port varies (typically COM4, see Device Manager for COM assignment. Baud Rate should be 1200.

Click Start G2 Server Button.
Starting the G2 Server reads the key then displays the software version, OS, database directory, COM port security key serial number, licensed blender count and other information. Over time the Server will display a log of information in the Message pane. The G2 Server program should remain running at all times to collect data. After Startup, nothing else is done within the G2 Server program. Each time you start the Server, it will remember the last used mode, COM port and baud rate. For more information about the G2 Server, see the complete Gravimetric Gateway manual.

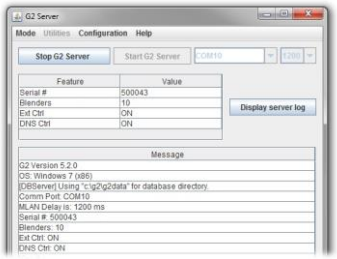

Security Key Detection
In licensed Mode, G2 looks for the security key. The G2-SK (G2-SA) "black box" is the security key plugged into the COM port. The G2-SK-E connects by USB and creates a new COM port.

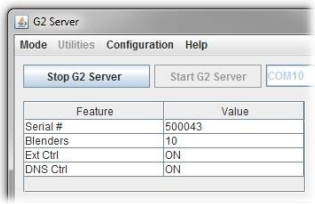

G2 Client Start Up

The G2 Client is the operator's interface to the G2 software. This part of the program is where all of the G2 actions are executed including adding and monitoring blenders, modifying settings, sending recipes and running reports. The G2 Client connects to the G2 Server either running on the same computer or a G2 Server on the computer network.

The G2 Client is started with the G2 Client shortcut located in the start menu and/or the desktop or quick start menu. Open the Client by double-clicking the shortcut.

If Security had been enabled, the G2 Client will prompt for a username and password. (Note: enabling security is an operation accomplished in the G2 Client in Setup).

G2 Client - Setup and Using the Software

First-Time setup of the G2 software includes the following steps within the G2 Client.

Basic Setup:
- Adding the Maguire Blenders
- Setting the End of Day Time
- Setting the Retrieval Times

Advanced Setup:
- Adding Materials
- Creating Recipes
- Downloading Recipes to the Blenders
- Generating Reports
- Applying Certificates for additional WSB, LIW or MGF licenses
- Creating Lines, Line Recipes and downloading Lines

Adding Maguire Blenders, Loss-in-Weigh, Maguire Gravimetric Feeders to G2

Setting up the Blender for Communication

Weigh Scale Blenders include Maguire WSB controllers with the keypad and a red display (6811 controllers) or the blue display (12-12 controllers) and Touchscreen Controllers. LIW Controllers will be the same configuration as the blue display 12-12 controller. These controllers will communicate with the G2 software using either Ethernet communications or Serial communications. All communications require setting the ID number. For Ethernet communications including built-in Ethernet and use of Ethernet to Serial converters, an IP address must be set. Follow these instructions for setting the ID number and IP address.

Setting the ID Number - The ID number is an identification number from 1 to 254. The ID number identifies the device within the software and also labels the blender within reports.

- 12-12, LIW and 6811 Controllers (Red and Blue Display, Keypad) - These controllers use a star function (*66) to set the ID number. On the controller keypad, press *22222 (default program mode password), then *66.

- Touchscreen Controller - Press OPTIONS, 22222 (default program mode password), then Special Functions, Setup, Blender I.D.

Setting the IP address - The IP Address of a Maguire controller must be set as a static IP address. DHCP is an option but the IP must remain static for ongoing communication from the G2 software. The MAC address is available for DHCP use.

- 12-12, LIW Controllers (Blue Display, Keypad) - These controllers use a star function (*65) to set the IP address, subnet and gateway. On the controller keypad, press *22222 (default program mode password), then *65. The TCP Port is 9999 with all 12-12 controllers.

- Touchscreen Controller - Press OPTIONS, 22222 (default program mode password), then Special Functions, Setup, TCP/IP Configuration. The TCP Port is 9999 with all touchscreen controllers.

- Ethernet to Serial Converters - See the Ethernet to Serial Converter (G2-ES-11) instructions for more information. Recommended model: Moxa NPort 5110. The default TCP port is 4001 with Moxa NPort 5110. Default TCP ports may vary.

- MGF, see the MGF-ST manual for more information on setting ID and IP address. The TCP Port is 9999 with all MGF controllers.

Adding Maguire Controllers to G2

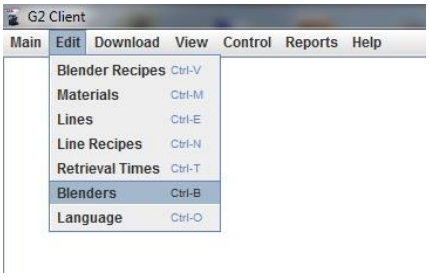

You must add your Maguire controllers to the G2 software. G2 will not auto-detect WSBs, LIWs or MGFs. This is done in the Edit / Blenders Screen of the G2 Client program. In the G2 Client menu, select Edit, then Blenders.

In the Blender Edit Screen, you will add one blender, LIW or MGF at a time. Enter the ID number of the Blender in the Blender ID field.

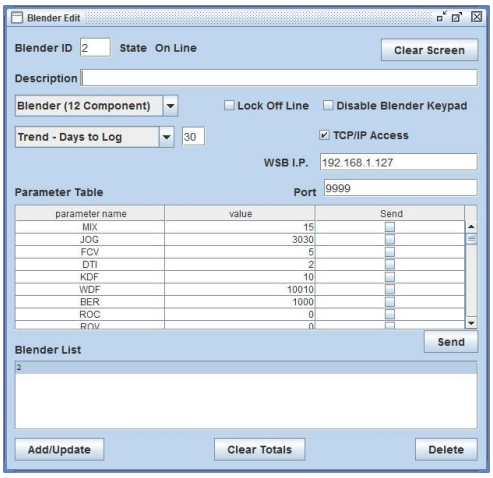

For Blenders select Blender Type of either 4-Software or 12-Software. Be sure to specify the correct software type as this will match recipe types to blender software types.

Serial Only: Blenders communicating by Serial (MLAN), click **Add/Update**.

For blenders connected to an Ethernet Network, check the box TCP/IP Access and enter the IP address assigned to the blender. Blenders with built-in Ethernet, use port 9999. Blenders using an Ethernet to serial converter will probably use a different port. Refer to the converter's instructions for port number.

After IP and port have been entered click **Add/Update**.

Successful communication can be verified by highlighting the blender in the list. State should show "Online". Parameters may also be displayed. The G2 Server will also display the status of the blenders as they are added.

<u>Blender Status (State):</u>

- **Online** - G2 is communicating with the Blender
- **Offline** - G2 was communicating with the blender at one time, but not currently.
- **Not Initialized** - G2 never established communication with the blender.

Additional Notes:

Communication by serial (MLAN) will route through the G2-SA (G2-SK, MLAN-SA) "black box". When communication is active, the red LEDs will blink. Left LED is communication sending commands, right LED is the response from the blender.

Troubleshooting: Check settings in controller (ID number, IP address). Ethernet communications, try command line ping of blender IP address. All wiring should avoid vacuum loader lines, high voltage lines, motors, transformers. Ethernet to serial converters, check settings of converter. Serial communication, check serial (MLAN) line integrity.

Creating Lines

Lines are groups of LIW hoppers that work together to produce a product. For XC-3 Multi-Layer Yield Control using the G2 Yield Screen, one or more LIW hoppers must be part of a Line for the Yield Screen to be able to control that Line.

To enter a line, click “Edit”, then “Lines” in the Client menu. Enter a Line Name. Next click position 1 in the Blenders column (highlights yellow). Select a Blender from the list of active blenders. The Blender ID moved into the column. Click position 2 in the Blenders column and click the next active blender from the list. Do this for each LIW Hopper in the Line. When complete, click Add/Update.

After a Line has been created, selecting the Line from the list will display **Line Rules**. Line Rules refer to how the Yield screen will react to adjustments. The Line Rules will default to the choices below, however they may be adjusted to suit your process. After making changes to the Line Rules, click Add/Update to save the rule changes.

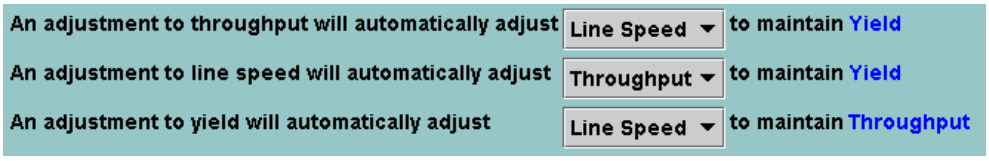

MGF Offset to LIW

If there is an MGF Feeder that is part of the line and is introducing material after the LIW, then the MGF percentage can be set to offset the LIW's layer total to maintain the total throughput of the Line. To enable MGF Offset select the checkbox MGF Offset. An offset field will be added to the Yield Control Screen where a percentage may be entered to offset the layer total throughput by this percent. This feature can be used for machine that do not communicate with G2 as long as the percent of material is known.

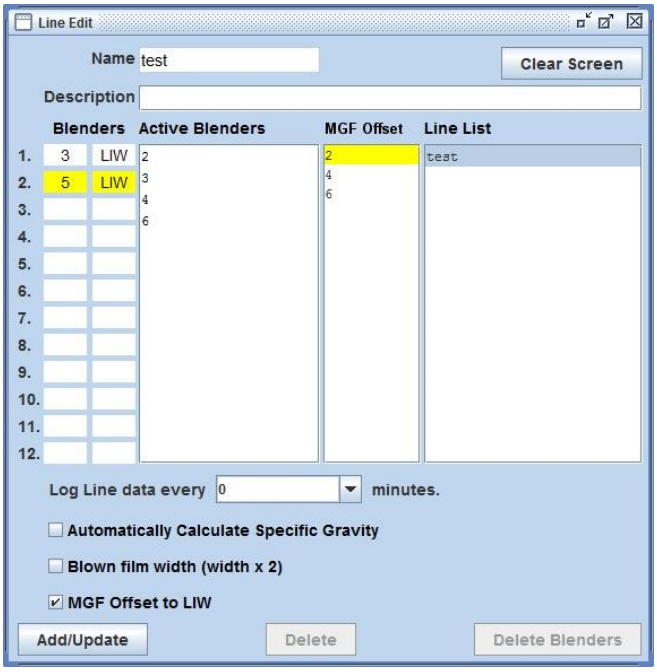

To associate the MGF with an LIW select the LIW in the left column (highlights in yellow). Then in the MGF Offset Column select one or two MGF's that would be associated with this LIW. When selected, the MGF will highlight in yellow. Do this for each LIW that has a corrosponding MGF. Note: MGF's must be added to G2 as Machine type MGF to be recognized as an MGF. When complete click Add/Update.

Adding Line Recipes (optional)

Line Recipes allow for multiple downloads of recipes to multiple blenders in a single click. This is optional. Recipe download typically are downloaded using the “Download To Blender” Screen. To enter a line, click “Edit”, then “Line Recipe” in the Client menu. Line Enter a Line Recipe name. Click the top position in the column to the right. In this screen each line of that column is the position of a Blender in the Line you created within the Line Edit screen. After clicking the top position, select recipe that you would want to download to the blender in that position. After selecting each recipe for the Line, click Add/Update.

Set End of Day, Set Retrieval Times

End of Day

In the G2 Client menu under Main / Setup on the System tab is End of Day. Set End of day to the time that you want the day to end for reporting purposes. Example: If 3rd shift ends at 7am and you want to include all of 3rd shift's accumulated totals in the date (day) that 3rd shift began, set End of Day to 7:00 AM. This will offset the end of the date to end at this time rather than midnight (12:00 AM).

Retrieval Times

In the G2 Client menu, under Edit / Retrieval Times is the list of times that G2 will log data automatically. By default G2 has 24 retrieval times, one per hour at the top of the hour. Logged retrieval times summarize totals in the database for reporting limited by retrieval times. If you wish to modify the logging frequency of time based totals, add or remove retrieval times from this screen.

Basic Data Collection

If you do nothing more than add your blenders, set the End of Day and set your Retrieval Times, G2 will collect the following data:

- Summarized totals based on time intervals, logged at the retrieval time. These reports are accessible from the Client menu Reports / Material Usage Reports. All Material Usage reports will identify logged material usage by the hopper number (hopper 1, hopper 2, etc).

- Cycle by Cycle Summary - G2 attempts to collect a summary of every cycle per blender. Cycle data is stored in the Cycle by Cycle database and can be viewed under the menu Reports / Cycle Reports. Cycle data is also accessible from View / Trend.

- Activity Logging - G2 collects: G2 to Blender activity, Blender detected activity and Alarms. This data is accessible from the menu Reports / Activity Logger or the Activity Logger icon on the right of the Client screen.

Advanced Data Collection

More specific reporting and additional blender control can be achieved with more advanced setup options in G2. These options will allow the following:

- Building a database of materials by name, type, description.
- Building blender recipes that include material names, material types, and settings.
- Sending recipes that include hopper settings, material types, work orders and operator numbers to the blenders. Also allows modification of stored recipe prior to sending.
- Tracking material usage by assigned material names instead of hopper numbers. Also material usage tracking by Blender, Line, Recipe, Line Recipe, Work Order, Operator, Retrieval Time, Day.
- Specifying groups of blenders together as a Line.
- Creating Line Recipes, groups of recipes that can be sent as one download to a Line.

Advanced Data Collection Setup

Adding Materials and Building Recipes

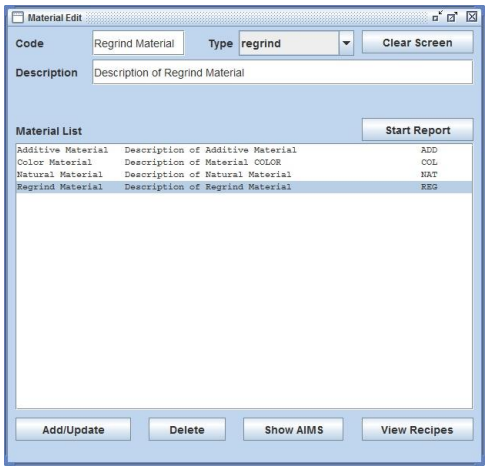

Adding Materials to the Materials database allows you to create recipes using material names. Recipes including material names, types and settings can be sent to the blenders. Through this action, G2 can then collect material usage totals from the blender hoppers and store the usage under the name of the material rather than a hopper number. This can be useful when trying to understand Material Usage reports.

Materials are added in the Material Edit screen, accessible through the Client menu Edit / Materials. Enter the Code (name of material). Select the material type. Types include: Regrind, Natural, Additive, Color. These types tell the blender how to calculate the material settings.

After adding the Code (name), material type and an optional description, click Add/Update. Add all of the materials that are used in the blenders.

Creating Recipes from Materials

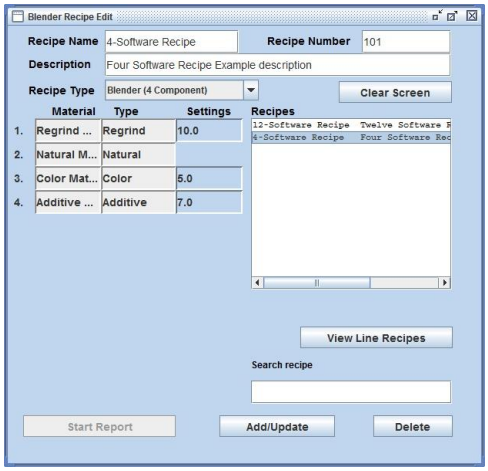

4-Software Recipe

Recipes can be added by going to the Client menu Edit / Blender Recipes. Enter a name for the recipe. Enter an optional recipe number (100-65536) and an optional description. Select the Recipe Type. For blenders, use either 4 or 12 software. LIW (Loss-In-Weigh) and MGF (Maguire Gravimetric Feeder) are also G2 compatible.

The row number on the left side of the screen represent the hopper number in the blender. Material name placement in recipes must match the actual material in the blender hopper. To place a material in the recipe, click the field in the material column that you want to place the material. Your Materials list will appear on the left. Click the desired material in the list.

IMPORTANT!

With the LIW system, a LIW controller is processing a single material or blend of materials. When you create a recipe for the LIW system, specific gravity is calculated from the percentages of multiple materials in your recipe. For reporting purposes, the LIW controller will use component 12 as an accumulator and the hopper 12 will show a type and setting in the recipe download screen. With the current G2 configuration, we suggest adding a material name that you would consider calling the "blended" material in the LIW hopper. Add this to your recipe in component 12 with the type Natural and a setting of zero. This will make sense once you run a material usage report.

If prompted with a material type, select the material type. type Color in 12-Software recipes becomes type Additive. Enter the desired setting for that material. Settings follow the rules of the Maguire blenders. Regrinds, colors and additives by default use a setting with whole numbers and tenths. If the setting uses 100ths (i.e. 6.75), the field will highlight in yellow indicating G2 will also adjust that components XT parameter, adjusting the decimal place to 100ths.

When the recipe is complete, click Add/Update.

For more information on building recipes, please refer to the Maguire Weigh Scale Blender manual.

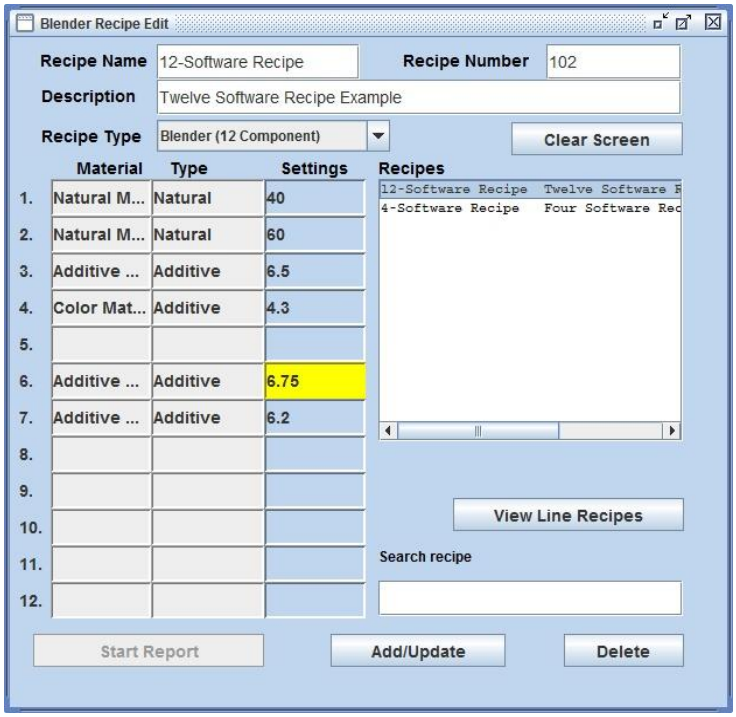

Downloading Recipes to Blenders

Recipes can be downloaded to the blenders in the Client screen Download Recipe to Blender. To access this screen in the menu go to Download / Recipe to Blender.

In this screen select your blender from the Blender # dropdown menu at the top of the screen. Only online blenders will be displayed.

When selected the blender's current information will display on the left side of this screen including current Operator #, Work Order #, and the currently loaded recipe, types and settings.

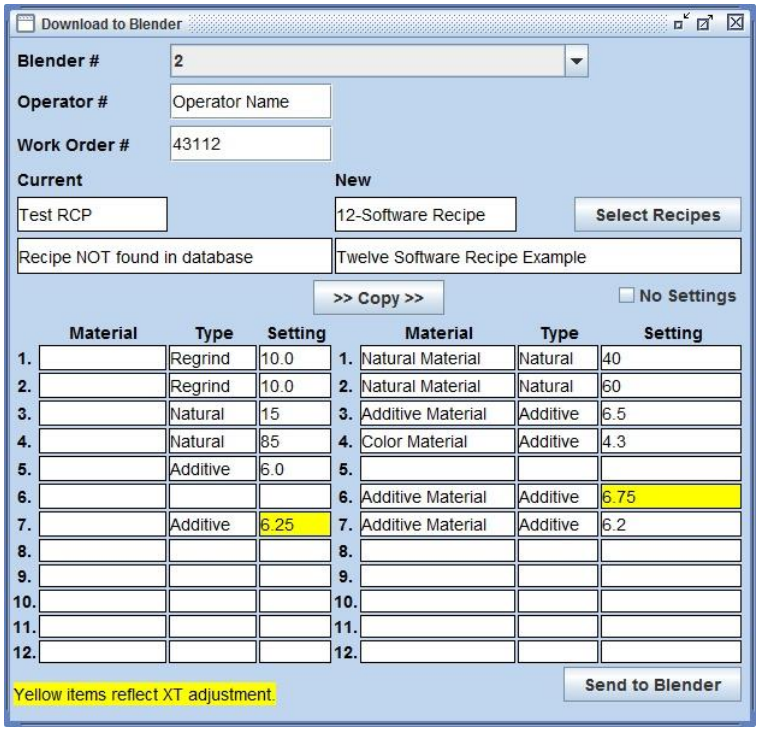

Setup Requirements

Before the Co-Extrusion process can be used in G2, the following requirements must be met. Steps 2 through 6 are outlined in the Quick Start Guide. For information on YDLX (single extruder), YDLT (single extruder), or YLDD (co-extruders), refer to your Blender Manual.

1. All Blenders must have the ***02** function set to **EXT CRTL, YLDX, YLDT,** or **YLDD**. See your blender manual for addition information on these parameter values and their function.

2. In a Co-Extrusion setup, one blender (master) must have the ***02** function set to **YLDD**. The blender set to **YLDD** must have the CPL parameter set prior to selecting any yield configuration. ***See Control Setup for Extrusion section in this manual for further information on CPL.*** All other blenders must be set to **EXT CRTL** (slave)**.**

3. All Blenders within the Co-Extrusion process must have a unique I.D. set using the ***66** function.

4. All Blenders within the Co-Extrusion process must be added to the **Blender Edit** screen.

5. All blenders must have a State of **On Line** in the Blender Edit screen.

6. A **Line** must be created using the **Blenders** that are part of the Co-Extrusion process.

The following steps are optional and not require to run extrusion control.

7. If materials are to be tracked by a material name, the materials need to be entered into the G2 database using the **Material Edit** screen.

8. **Blender Recipes** are then built from **Materials** in the Materials list and then added to the Recipe Database. If you plan to use the blender recipe feature of G2 with LIW controllers see the above section on creating recipes.

After following the above steps, you are now ready to begin using the Yield screen to control the extruder(s) and the downstream equipment.

Generating Data Reports

When a blender is added to the G2 software and G2 is able to communicate with the blender, two types of data will be collected from the blender automatically. The first is tag based reporting. G2 will collect Material Usage reports based on tags assigned to the blender.

Tags can be based on:
Retrieval Time - Time based reports with sub totals port retrieval time interval.
Recipe - If a recipe is sent to the blender, usage is tagged with that recipe name.
Work Order - If a Work Order is sent to the blender, usage is tagged with that Work Order.
Operator - If an Operator tag is sent to the blender, usage is tagged with that Operator.
Line - If multiple blenders are assembled into a line, G2 will track usage under that Line tag.
Line Recipe - If a line recipe is sent to a line, usage will be tagged with that line recipe.
Day - Once a day, at the End of Day time, usage is recorded for 24 hour daily reporting.

Material Usage Reports

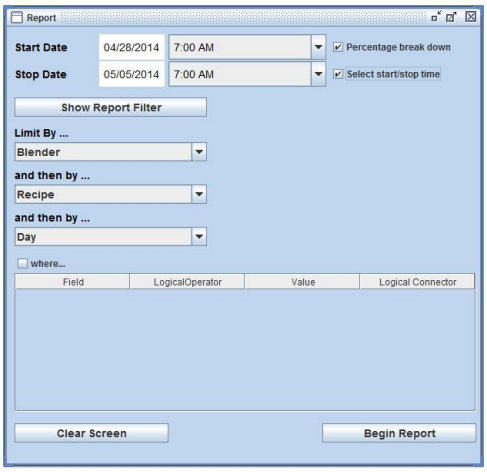

The output of tag based reports are Material Usage Reports. Material Usage reports can be accessed in the G2 Client program under the Reports menu, Material Usage. The Material Usage screen has the following options:

Start Date and Stop Date - The calendar date to begin and end the report. if no time is specified, the time is from the earliest time with the start date to the final ending time of the stop date. To specify the time, check the box Select start/stop time.

Limit By - The options in the limit by dropdown menus are the tags as listed above. When selecting tags, other tags may not be available when further limiting the reporting criteria.

Report Filtering using: where...

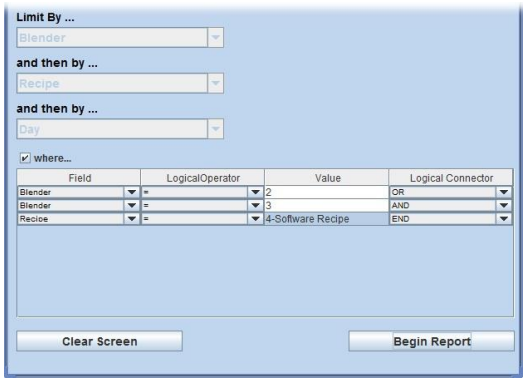

Exact Tags can be specified using the "where" feature in the Material Usage screen. To use this feature, after selecting the report criteria from the dropdown menus above, check the box labeled "where...". The tags selected above will be available from the first field. Choose the limiting tag. Select a logical operator: > (greater than), >= (greater than or equal), = (equal to), <= (less than or equal to), < (less than). Specify the tag value in the value field (example, a blender ID number or recipe name).

In the Logical connector, use "END" to complete the report criteria limiter. Use "OR" to specify a new tag on the next line. Use "AND" if this tag and the next tag have to both be true for a report record to display (example if you want a report that includes both a specific blender ID as well as a specific recipe, use AND to connect these two tags and display only that usage.

When your report criteria is complete, click **Begin Report** to generate the onscreen report.

Cycle By Cycle Reports

The second type of data that G2 automatically records per blender is data specific to individual cycles. G2 attempts to collect each cycle from the blender as the cycle occurs. A Cycle by Cycle report includes: date and time, cycle count, cycle time, data for each of up to 12 components including: material names, material types, hopper settings, and accumulated total of each material. Cycle by Cycle reports can be viewed on screen in a table format, formatted into a printable report, or exported to an Excel friendly CSV file.

The Cycle by Cycle report is accessible in the G2 Client program under the menu, Reports / Cycle Reports. In this screen, select the blender from the dropdown menu at the top. Note: Only blenders that are online are shown. In Live view, cycles display as they occur from the point when the blender is selected. In History view, you may select a date and time range to search for records in the database.

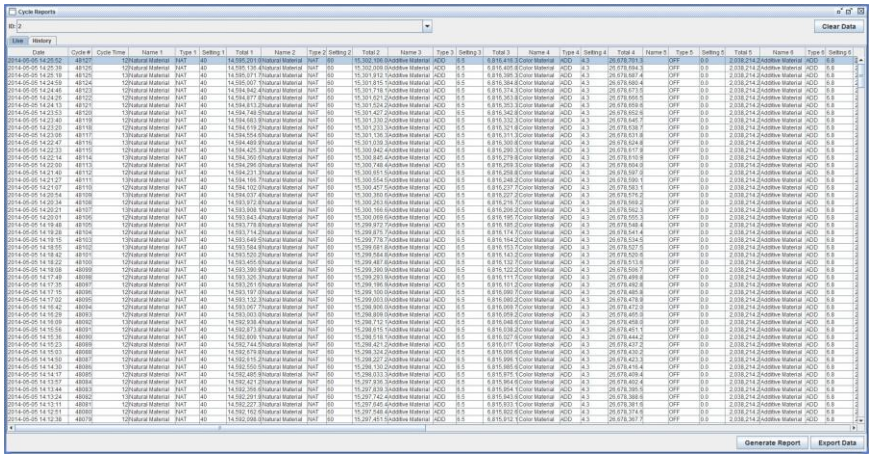

Click Export Data and you will be prompted for a location on your computer to save an exported file containing all displayed cycles. Exported files do not have a default file extension if you wish to use the extension csv (comma separated values), you must type full file name (example: cycles.csv)

Click Generate Report and an easy to read report is generated with 4 cycles per page, each formatted in its own table. From this report screen, the pages for the cycle report can be printed to a printer or saved to a formatted or non-formatted file (no title).

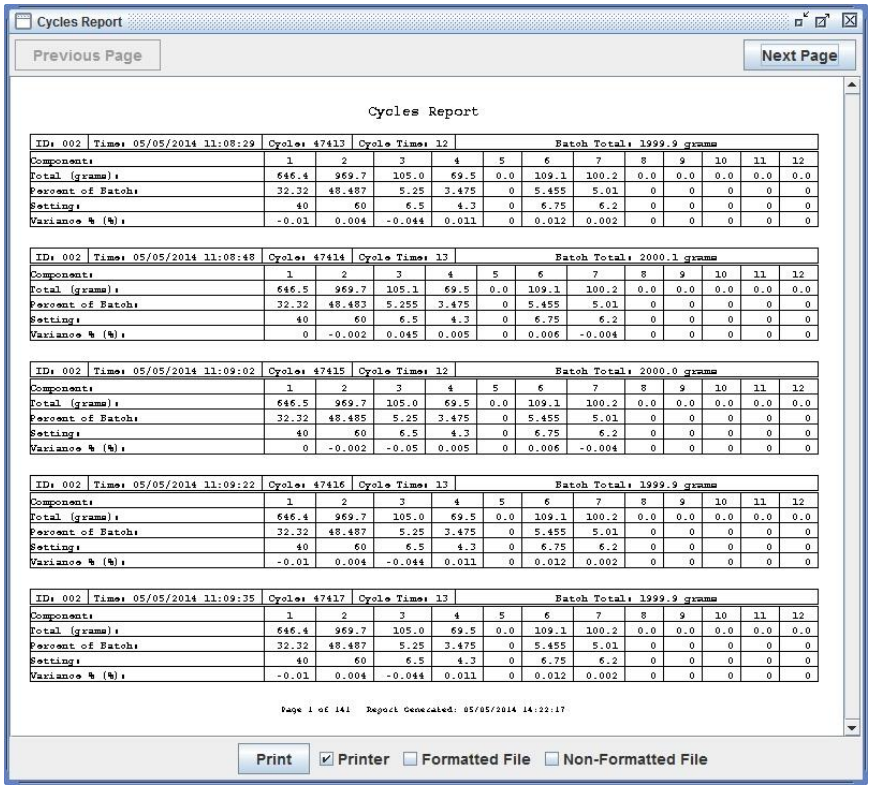

For more information on G2 program usage or additional reporting information see the complete G2 manual located on the G2 installation CD or USB. The G2 program as well as complete documentation can be found on our website: www.maguire.com

Using the LineMaster Yield Screen

Yield Control offers to the operator, the ability to control Co-Extrusion Lines consisting of 1 to 7 extruders while intelligently controlling the downstream Take-Off equipment.

Yield Screen - Startup Process:

In the G2 Client, select from the menu above, **Control** then **Yield** to open the Yield Screen. In the Yield Screen, **select your line** from the dropdown menu in the upper-right. This will display your line and all blenders within the line.

Explanation of the Yield Screen

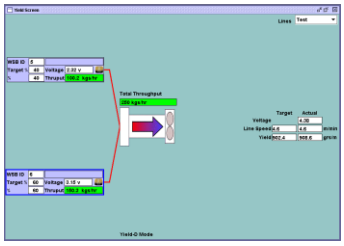

The Yield Screen - On the left side of the screen are information tables, one for each extruder's WSB/LIW controller. Depending on the number WSB/LIW controllers you are using, 1 to 7 tables will be displayed. **Verify that all blenders are ONLINE.** All blender Ids and their corresponding information will be loaded into the appropriate fields. If any blender is listed as **OFFLINE** meaning G2 cannot communicate with that blender for any reason, the corresponding table of information for that blender will be grayed out. Before proceeding with Yield Control, you will must bring that blender **ONLINE**.

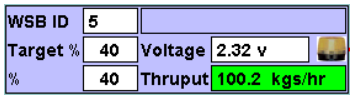

Each table consists of the blender's unique ID number, the Throughput %, the current voltage, the current throughput, and an alarm indicator.

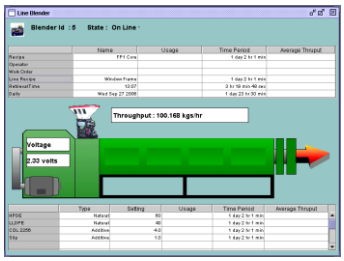

Clicking on the WSB/LIW ID field will bring up a screen where you can further examine the line. This screen will display an more detailed examination of each blenders settings and outputs.

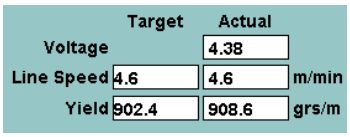

At the right are your take-off controls. Displayed are: two columns of information, **Target** and **Actual**. The fields within the columns are Voltage (Actual voltage only), Line Speed, and Yield. Line Speed is displayed meters per minute (m/min) or in feet per minute (ft/min). Yield is displayed in grams per meter (grs/m), or grams per foot (grs/ft). Measurement units are set in the Setup Screen when choosing your Weight Units.

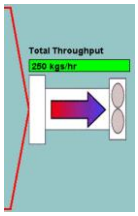

All lines will visually merge where your Total Throughput will be displayed.

XC-3 Startup – Using G2's Yield Screen

Before startup, make sure material is available at the fill valve of the Loss-in-weight hopper.

Setting Voltages for each Extruder

1. With the **LineMaster Extruder Speed Control** in the **MANUAL** position, turn main power of **LineMaster (XCC) Controller ON**

   Display will read: **0.0 K/h EXTRUSION UNLOCKED**

2. At the **LineMaster Extruder Speed Control** begin increasing the voltage by rotating the **ADJUST** pot clockwise. Rotate **ADJUST** pot until desired RPM (voltage) is attained. As material begins to flow through the Loss-in-weight hopper and into the extruder, an actual rate of throughput is displayed.

   Do this for each extruder's LineMaster Extruder Speed Control.

3. At the **LineMaster Take-Off Speed Control** begin increasing the voltage by rotating the **ADJUST** pot clockwise. Rotate **ADJUST** pot until desired Line Speed (voltage) is attained.

4. After the Line running for a period of time, view your Yield Screen in G2. Verify that G2 is showing your Extruder Speed Control voltages, your throughput values, your take-off voltage and line speed, and your grams per length.

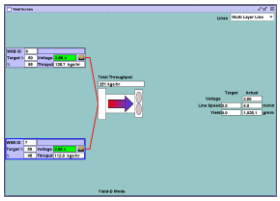

5. **Adjust your target percent for each extruder** – To adjust your target percent, click the **Target %** field of any of your extruders.

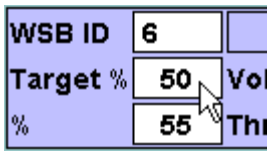

6. A Target Percent keypad window will appear. On the right of this window will be a list of your extruders by ID number. To the right of each ID number is the current percent of each extruder (column is labeled %). The far-right column is where your new Target Percent will be enter. To enter a new percent, click the row of your extruders ID's row to select that extruder. Using the keypad, enter the new percent. Select each extruder by clicking the row, then using the keypad, enter the percent. The total of all percentages must add up to 100%, indicated by Red (not = to 100% or Green (= to 100%) color of the total percent field). When satisfied with the percentages, click the **Close and Download All Percentages** button.

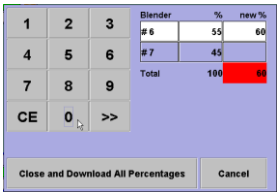

7. All **LineMaster Extruder Speed Controls** can now be put into the **LOCK** position to maintain the current rate of throughput and yield. In LOCK position, automatic adjustments to the (0-10v) extruder voltage and (0-10v) Take-off are made by the LineMaster (XCC) Controller to maintain the locked rate of throughput and yield.

Adjustments

When in the locked mode, adjustments to the rate of **Throughput** or **Yield** will be entered through the G2 Yield Screen. These adjustments will follow the Line's Yield rules (see Creating Lines in the previous section).

Keypad Entry

Making Throughput Adjustments

Keypad adjustments to Total Throughput are made within the G2 Yield screen. Throughput adjustments are made by clicking the **Total Throughput** field, which will display a **Set Total Throughput** keypad. Using the keypad, enter the new target Total Throughput, and then click OK. Adjusting Total Throughput will automatically make adjustments to individual layer throughputs based on their percentages. Based on the default Line Rules, a change to Throughput will automatically adjust Line Speed to maintain yield.

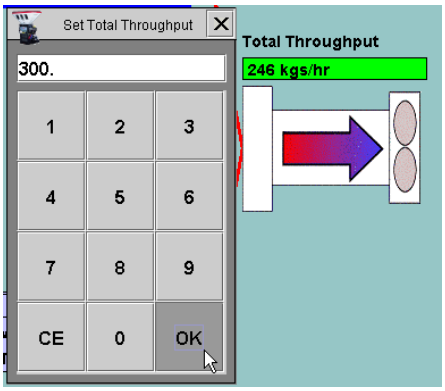

Adjusting Line Speed

Keypad adjustments to Line Speed are made within the G2 Yield screen. Line Speed adjustments are made by clicking the **Line Speed** target field, which will display a **Set Line Speed** keypad. Using the keypad, enter the new target Line Speed, and then click OK. Based on the default Line Rules, a change to Line Speed will automatically adjust Total Throughput to maintain yield. The Line Speed adjustments are made to the 10ths.

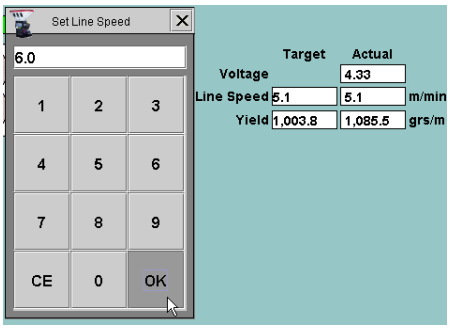

Adjusting Yield

Keypad adjustments to Yield are made within the G2 Yield screen. Yield adjustments are made by clicking the **Yield** target field, which will display a **Set Yield** keypad. Using the keypad, enter the new target Yield, and then click OK. Based on the default Line Rules, a change to Yield will automatically adjust Line Speed. The Yield adjustments are made to the 10ths.

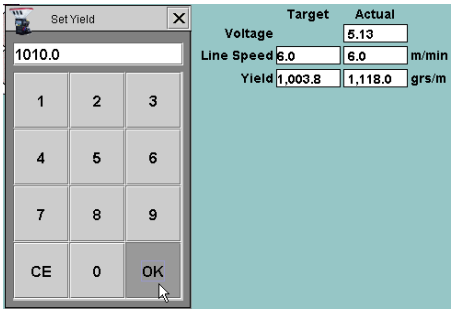

LOCK Options through the G2 Yield Screen

On the G2 Yield Screen Current Throughput and Yield can be Locked. Clicking any of the layer throughput fields will display a keypad panel with a Lock or Unlock button (depending on the current state). Clicking on this button will either lock or unlock all layers. To use G2's Lock or Unlock option, the LTP parameter in all **LineMaster (XCC) Controllers** must be set to LTP 1xxxx, where the first digit in this parameter is set to a 1. Setting the LTP parameter to use this option will de-activate (and ignore) the LineMaster Extruder Speed Control MANUAL / LOCK switch.

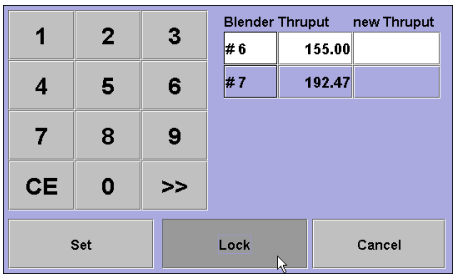

Shutdown

Normal Shutdown Procedure – First switch the **LineMaster Extruder Speed Control** into **MANUAL** position. Then rotate the **ADJUST** pot counterclockwise (at your desired rate of decrease), eventually reaching zero volts (zero RPM).

XC-3 with Gauge Control using G2's Yield Screen

Gauge control allows G2 to control the individual layers by volume and by percent using the layer's specific gravity to calculate each layers gauge.

G2 Setup for Gauge Control

To enable Gauge Control in the G2 Client, go to Main/Setup then the System Tab. Click the Checkbox labeled **Enable Gauge Control**. Click **Add/Update** to save the change in Setup.

Enabling Gauge Control will make several new fields visible in the Yield Screen. With each Layer's information box, the field Specific Gravity will be displayed. The Specific Gravity can be manually entered here in the Yield Screen.

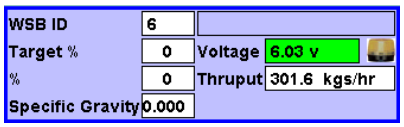

Also a calculated yield box will display in the upper-right of the Yield Screen.

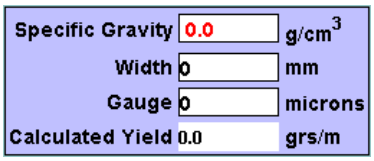

All fields must be set before the layers can be locked.

To enter a specific gravity manually, click the **Specific Gravity** field then enter the Specific Gravity for that layer. Then click **OK**. Repeat this step for each layer.

Alternately the specific gravity can be automatically calculated and displayed in this field based on the recipe downloaded to the controller. This feature is useful if your recipes contain more than one material. To have the Specific Gravity automatically calculated and displayed, the following steps are required.

In the Line Edit screen, select your line, then click the checkbox **Automatically Calculate Specific Gravity** then click **Add/Update** to save the change to your line.

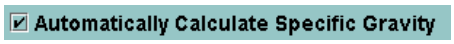

Recipes are generally made up of one or more materials. All materials in a recipe must have a specific gravity entered for automatic calculation to occur. Within the recipe, the settings entered for multiple materials are used to calculate the Specific Gravity of the recipe. Specific gravity for each material is entered in the Material Edit Screen. Enter the specific gravity of

a given material in the **Specific Gravity** field. Click Add/Update to save changes to a material.

Once a Specific Gravity has been entered for all lines, the actual percent per layer will be displayed.

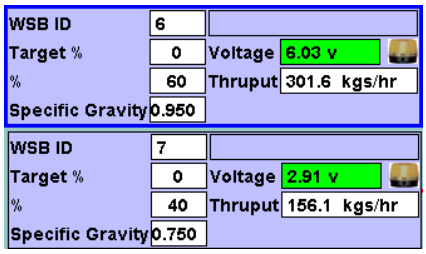

If the actual is not the correct percent that you will be running, a target can be entered. Once all layers are locked, the actual percent will be adjusted to meet the target. To adjust the target percent, click any of the layer's Target % fields to display the Target Percent box. Enter the new percent (must total 100%) then click **Close and Download All Percentages**. Locking all layers will apply the new percentages.

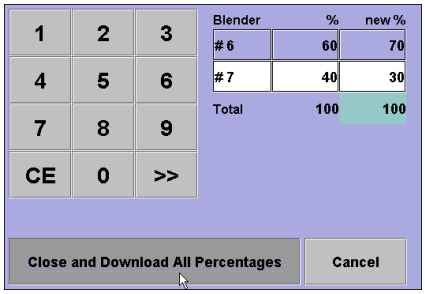

In the upper-right of the Yield screen, the Calculated Yield Box requires information to be entered. Overall Specific Gravity is displayed at the top of this box and is calculated from the layers by their percent.

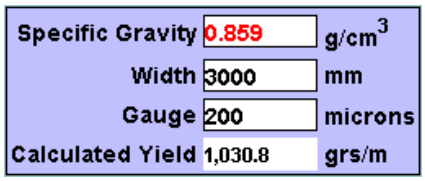

You will need to enter the Width and gauge of the product. To do this, click the Width box to display a keypad. Enter the Width, of your product, then click OK.

To set the gauge, click the Gauge box to display a keypad. Enter the Gauge of your product, then click OK.

Once these values are entered, a **Calculated Yield** will display.

After all layers are in the lock position, Total Throughput will be locked. This will be indicated by the **Total Throughput** field turning green.

Also the Calculated Yield will be sent below to the **Target Yield** field. The **Actual Yield** will be adjusted to meet the target yield value in order to maintain the entered gauge.

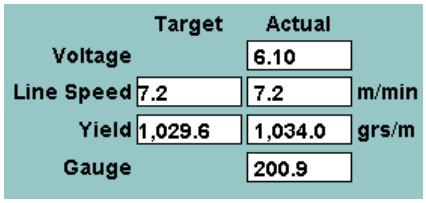

It's Rolling Rock Time.

Controller Description – Controls and Outputs

Front Panel

- **KEYPAD**
- **DISPLAY**

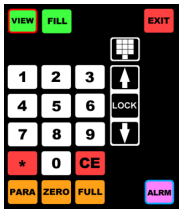

KEYPAD

See Keypad functions on page 66.

DISPLAY 40 Character Vacuum Fluorescent Display (VFD)

Displays the current rate, internal parameters, and other information and prompts to assist the operator.

##.# K/h **##.# Lb/h**	Numbers displayed are the current rate expressed in kilograms per hour or pounds per hour. By pressing the CE key, the display will show the raw count on upper left and the total weight of material, in grams, in the bin at that moment. This displays for 30 seconds and then reverts back to the main display.
EXTRUSION **YLDX** **YLDT** **YLDD**	This is the Mode that that LIW controller is running in. Labeled as EXTRUSION, YLDX, YLDT or YLDD and located in the lower left of the screen. This mode is set by the *02 function.
A=0.00V **B=0.00V** **A=0.00V, B=0.00V**	Depending on the Mode the controller is in, Pressing the CE key will display one of the following, "**A=0.00V" "B=0.00V" or "A=0.00V B=0.00V"** with actual voltage of the extruder or takeoff. **A** indicates Extruder voltage; **B** indicates Takeoff voltage and **A**, **B** together (on lower left and lower right) indicate Dual (Extruder and Takeoff voltage).
UNLOCKED **LOCKED**	Indicates if the RATE is LOCK ED or UNLOCKED.
*** **INVALID** ***	Indicates: 1. You pressed an incorrect key - or 2. You pressed a key for a function that is not active – or 3. 3. You are not in the right mode for this key to operate.
ENTER PASSWORD	Password is displayed when you press the "*" key from the normal mode. Enter: 11111 - for MANUAL mode 22222 - for PROGRAM mode - or Enter your own password number if you have established one.
PROGRAM	In the lower Right position of the display indicates unit is in PROGRAM mode.
INSTRUCTION [_ _]	This is displayed when you press the * key from the PROGRAM mode. Enter a 2-digit instruction number for special tasks.

Controller – Left Side

- **LOAD CELLS Port**
- **ETHERNET RJ-45 Port**
- **COMPUTER SERIAL Port**
- **Fill Valve Port**
- **USB Printer/Flash Drive Port**
- **Digital Pot Port**
- **Fill Valve Open/Close Switch**

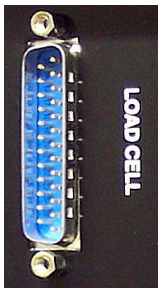

LOAD CELL input port

On systems with two load cells the leads are joined by a common connector that is plugged into this port.

ETHERNET PORT (RJ-45)

The Ethernet port allows for communication to the controller over Ethernet. Communication through this port is TCP/IP utilizing the MLAN Protocol or Modbus TCP. The G2 Software, using the MLAN Protocol, can communicate with the controller over Ethernet using this Ethernet port.

For information on configuring the Ethernet interface, see Communications.

COMPUTER SERIAL Port

This port can be used for computer or PLC communications to the controller. Data can be gathered from the controller or commands sent to the controller using either Maguire's Gravimetric Gateway software or using the MLAN Protocol. The Gravimetric gateway Software (G2) allows downloading settings and retrieval of information and will produce reports for those customers who wish to take advantage of this feature. One or many LIW Controllers can be connected to one computer. For more information, contact Maguire Products and request our "G2" software. Additionally you may write your own communication software by using the MLAN Protocol to send commands to the LIW controllers. For more information on the MLAN Protocol, read the MLAN Protocol Manual. The G2 Software and the MLAN Protocol Manual as well as other important documents are available on our website, www.maguire.com.

FILL VALVE PORT

The fill valve port is a 24 volt output to the Fill Valve and operates the fill valve located above the LIW Hopper. See wiring Diagrams.

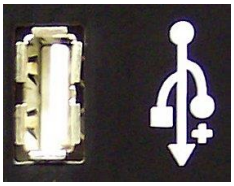

USB PRINTER PORT

This is a USB port. A USB printer or USB Drive plugged in here allows four types of information to be ported directly to a USB printer or USB Drive giving the benefit of a permanent printed or digital record. They are:

1. The totals of the material usage data.

   Press VIEW and * keys or use the PRT parameter to AUTOMATICALLY and periodically print these totals.

2. A listing of the internal parameter table.

   Press *77 in the PROGRAM mode.

3. A printout of information after each cycle including actual dispensed weights and percentages for every cycle.

   Press *54 in the PROGRAM mode, use * to set printer flag ON.

4. A printout of information after the TIME or CALIBRATE routines. *54 flag must be on to allow this.

5. Print Display – This is useful for obtaining printed verification of load cell accuracy ISO and other international quality program rules.

   Press *88 before and after placing a KNOWN CERTIFIED WEIGHT into the weight bin to print the Date, Time, Machine number and displayed weight.

The USB port can also be used to update the controller's software. For information about updating the controller software see Updating Controller Software and the Star function *93.

NOTE

Notes about printing to a USB drive

When saving printout information to a USB drive, the USB drive must contain a folder named **maguire** and within the folder, a file labeled **PRINTER.TXT** must be present. It is this file, **PRINTER.TXT** that printout functions appended to. Also note that every time a print occurs to the file on the USB drive, the data is appended to the end of the file PRINTER.TXT and does not overwrite existing data within the file.

DIGITAL POT Port

This port supplies power and communication to the XCD-X Extruder Drive Control. See wiring Diagrams.

FILL VALVE OPEN/CLOSE Switch

This switch opens or closes the Fill Valve above the LIW Hopper. This switch is used to manually control the Fill Valve during maintenance or emptying of the LIW Hopper.

Controller - Right Side

- **SILENCE ALARM**
- **POWER SWITCH**
- **MIXER MOTOR FUSE**

SILENCE ALARM

This button stops the STROBE and BEEPER ALARMS, but does not remedy the cause of the alarm.

STROBE LIGHT and BEEPER ALARMS

The Strobe light flashes and the Beeper sounds when a component fails to meter properly. Alarms begin after a number of retries have occurred, this number determined by the parameter table (see Parameters, _AL). These alarms can also indicate an out-of-range TARE weight. This range is set by the TL and TH parameters; above 100 or below -50 grams.

ALARM SPEAKER

STROBE LIGHT

POWER ON switch

Controls all power to the controller and all outputs. When power is switched off, battery backed-up RAM preserves all internal totals and parameters. All other functions are reset for normal start-up when power is restored.

PANEL FUSE for processor - 1/2 amp

Fuses power to the circuit board power supply, which includes the solenoid output.

Communications

Communications with the 12 – 12 Controller

Located on the left side of the controller are two communication ports, a Serial port and an Ethernet port. Through these communication ports information can be sent to or gathered from the Maguire LIW Controllers. The standard protocol for communication with the Maguire LIW Controllers is the MLAN Protocol or Modbus TCP. The G2 Software developed by Maguire Products uses the MLAN Protocol to send commands to the controllers, over RS-232, RS-485 or Ethernet.

COMPUTER SERIAL input / output

Serial has been the standard method of communications until the introduction of the 12–12 Controller and the LIW Controller, when onboard Ethernet became available. For customers who have been using Serial for their communications, this option is still available on new controllers.

The serial port can be used for computer or PLC communications to the controller. Data can be gathered from the controller or commands sent to the controller using either Maguire's Gravimetric Gateway software or using the MLAN Protocol. The Gravimetric gateway Software (G2) allows downloading settings and retrieval of information and will produce reports for those customers who wish to take advantage of this feature. One or many LIW Controllers can be connected to one computer. For more information, contact Maguire Products and request our "G2" software. Additionally you may write your own communication software by using the MLAN Protocol to send commands to the LIW controllers. For more information on the MLAN Protocol, read the MLAN Protocol Manual. The G2 Software and the MLAN Protocol Manual as well as other important documents are available on our website, www.maguire.com.

ETHERNET PORT (RJ-45)

The Ethernet port allows for communication to the controller over Ethernet. Communication through this port is TCP/IP utilizing the MLAN Protocol or Modbus. The G2 Software, using the MLAN Protocol, can communicate with the controller over Ethernet using this Ethernet port.

All G2 communications with the LIW controller though the Ethernet port communicate over a user specified IP address and port 9999.

LIW Controller Keypad – Description of Functions

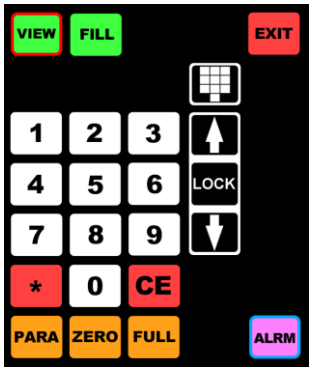

There are two operation Modes are available:
NORMAL and **PROGRAM**.

NORMAL operating mode - When power is turned on, the unit is in this mode. Only the VIEW, CE, EXIT keys are available in this mode. The keypad, arrow keys and lock key are available when running in Normal mode and in “Lock”.

PROGRAM mode allows access to star functions, parameters and additional configuration and diagnostics and calibration functions. To enter program mode, you must press * then enter the program mode password.

VIEW DATA

Press to display the CURRENT Date and Time, LAST CLEARED date and time, and stored Grand Totals. Total **Cycles** and weight **Total** (in Pounds, Kilos) are available.

Number of CYCLES that have occurred: (Cycles: xxxxx)
Total accumulated weight: (Total: xxxx.x)

Each successive press of the VIEW key displays the next item. The last displayed line will say (00=CLEAR) for 5 seconds. During this time, you may press 0,0 to clear the data. Waiting 5 seconds or pressing any other key will exit the sequence. When the sequence is exited, normal automatic operation resumes. These totals may be displayed as pounds or kilograms by a selection procedure explained later (*89).

Press the VIEW key once followed by the "*" key to cause all information to be sent to the printer (if available). To then clear the data, press 00 within 5 seconds. Press any other key or, wait 5 seconds, to continue the process without clearing the totals.

EXIT

This key is operational in ALL MODES.

Use the EXIT key to exit any and all keypad sequences.

CE

Press "CE" at any time to display raw data readout of the load cells for five seconds. This is helpful in diagnosing possible load cell problems and is explained in detail in the MAINTENANCE section.

"CE" is used frequently in connection with other keys, to clear or scan through selections.

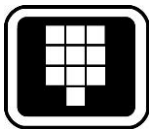

Keypad Entry

Keypad adjustments are made using the keypad button located above the up and down arrows on the keypad. Pressing the keypad button, will display: ENTER TARGET _ _ _ _ _.

Enter the value of grams per length (g/l) using all 5 digits (the last digit is in 10ths). Be sure to include any leading zeros (example: 120.0 grams per length (g/l) would be entered as 01200.) Keypad entries can only be entered in the locked mode. For more information about the use of this key see Standalone Operation and your specific application, XC-1 or XC-2.

Incremental Adjustments

Incremental adjustments are made using the up and down arrows on the keypad of the **LineMaster (XCC) Controller**. Press and release once of the arrow keys increments up or down by one tenth of a gram. Pressing and holding of the arrow keys will rapidly increase or decease the value. Incremental entries can only be made in the locked mode.

Lock Options

On the **LineMaster (XCC) Controller** keypad, between the up and down arrows, is a **LOCK** key. This **LOCK** key can be used to Lock throughput, overriding the LineMaster Extruder Speed Control MANUAL / LOCK switch. To use the keypad LOCK option, the LTP parameter in the **LineMaster (XCC) Controller** must be set to LTP 1xxxx, where the first digit in this parameter is set to a 1. Setting the LTP parameter to use this option will de-activate (and ignore) the LineMaster Extruder Speed Control MANUAL / LOCK switch.

For more information about the use of these keys see Standalone Operation and your specific application, XC-1 or XC-2.

KEYPAD - PROGRAM MODE

In this mode, you may perform ALL of the functions available in MANUAL mode, plus additional functions that alter the logic with which the controller operates. The PARA key operates in this mode. STAR FUNCTIONS are available by pressing the "*****" key and two numbers.

To enter this mode, press "*****", then enter the correct password number. The correct password supplied with the unit is "22222". To change this to another 5-digit number of your choice, see (***78**). When in the PROGRAM mode, the "PROGRAM" is displayed at the lower-right of the display.

The following PROGRAM functions are available in the PROGRAM mode.

PARAMETERS: Press the PARA key to display the table of operating parameters that reside in memory. There are 13 separate groups of parameters. The first group is the GENERAL group and contains 49 GENERAL parameters. The other 12 groups are the COMPONENT groups and contain 14 COMPONENT parameters each.

FILL

This key allows you manually actuate the Fill Valve located above the LIW hopper. While in Program Mode, pressing the Fill key will open the Fill Valve. The Valve will remain open until the Fill Key is pressed again.

ZERO WT

Zero Weight Calibration

If you are collecting totals from the LIW controller with software, a Zero Weight and Full Weight calibration should be done periodically, approx every 6 months, to assure accurate data in your totals reports.

To do a Zero Weight Calibration see the Zero Weight Calibration section in this manual on page 81.

FULL WT

A Zero Weight Calibration must be done before a Full Weight Calibration to achieve a proper calibration.

To do a Full Weight Calibration see the Full Weight Calibration section in this manual on page 82.

ALARM

This key allows you manually activate the visual and audible alarm. *(Current non-functional)*

Star Functions

Star Functions are only available in PROGRAM mode:

[*][0][2] **EXTRUDER MODE - Extrusion and Yield Control, and Rate display**.

Press (*,0,2) to turn on Extrusion or Yield control.
The default display is **EXTRUSION CONTROL.**
Press * to toggle this flag **EXTRUSION CONTROL**,
or the following **YIELD CONTROL** modes:

EXTRUSION - Extruder Control
YLD-X – Extruder Control
YLD-T – Takeoff
YLD-D – Dual

[*][0][5] **CLEAR DATA PROMPT - Prevent Totals being Cleared**

Press (*,0,5) to inhibit the (00=CLEAR) display at the end of the VIEW sequence.

Customers using MLAN or G2 software for retrieval of material usage information may wish to restrict an operators ability to clear the material usage data at the controller. This option allows you to remove the floor operators ability to clear this data. Press * to toggle between **CLEAR DATA PROMPT ENABLED** and **CLEAR DATA PROMPT DISABLED**.

[*][1][1] **SELECT DATE FORMAT - Sets System Date and Time**

Press (*,1,1) to set the date format and to enter the correct date and time into the real-time clock. Correct date and time is helpful if you are retrieving information using a printer or are collecting data by computer.

The first display will indicate USA or EUROPE date format.
Use the CE key to toggle from one to the other.

USA will cause all dates to be displayed MONTH/DAY/YEAR.
EUROPE will cause all dates to display DAY/MONTH/YEAR.

Press * to enter the current date and time. Enter the date and time using the keypad numbers. The date and time fields will advance as numbers are entered. After entering the year, the controller will exit to program mode.

The correct date and time have been entered at the factory and should never have to be reset. Of course you may be in a different time zone.

[*][1][2] **Restore Factory Default Settings**

Press (*,**1**,**2**) to restore the Blender's hard-coded factory default settings.

Pressing *,**1**,**2** restores Factory Default Settings into "User Settings" and "User Backup Settings" (retains certain important information). Display will show:

RSTR. ROM DEFAULTS. **It will not prompt for confirmation**. Resets immediately after **∗12** is pressed. Accessible in Program Mode Only.

NOTE

NOTE: The battery used for backup is a lithium battery that is part of an I.C. chip on the board. It has an expected 10-year life and is not easily accessible for replacement. Should it fail, we suggest that it be replaced at our factory.

∗ 2 3 **Save User Settings**

Press (**∗**,**2**,**3**) to copy the current "**User Settings**" into "**User Backup Settings**". The display will show **SAVE USER SETTINGS**. *For an explanation of the memory areas in the Blender software as well as the use of the **Clear** and **Clear All** Routines see the Backup, Restore, Factory Reset section.*

Once saved, this information is then available for retrieval using the CLEAR routine (press CE key on Power Up) or by using the **∗32** function described next. When finished, press **Exit** to save changes, then press **Exit** again to exit out of Programming Mode. Accessible in Program Mode only**.**

∗ 3 2 **Restore Saved User Settings**

Press (**∗**,**3**,**2**) to copy the "**User Backup Settings**" into "**User Settings**". Display will say **RESTORE USER SETTINGS**. *For an explanation of the memory areas in the Blender software as well as the use of the **Clear** and **Clear All** Routines see the Backup, Restore, Factory Reset section.*

This is useful for retrieving correct information that you may have stored earlier in the "**User Backup Settings"**. Also, if you have been making changes to **User Settings** and now wish to restore all settings to what they were at power up, this is the function to use. When finished, press **Exit** to save changes, then press **Exit** again to exit out of Programming Mode. Accessible in Program Mode Only**.**

∗ 3 3 **Extrusion Following / Trim Mode**

Press (**∗**,3,3) to enable / disable Following Mode or Trim Mode.
With Following Mode enabled and in <u>manual mode</u> the Linemaster interface card will receive a 0-10V input signal from an existing speed control (AD0, ADGD, see wiring diagram on page) and pass through the 0-10V signal to the extruder drive (DAOUT, DAGD, see wiring diagram on page).
With Trim Mode Enabled and in <u>auto mode</u> the Linemaster interface card will receive a 0-10V speed reference from the haul off (AD1, ADGD, see wiring diagram on page) and use that to control extruder speed with an output of 0-10V (DAOUT, DAGD, see wiring diagram on page) to match the ratio of the haul off speed (typically used in wire and cable).

∗ 2 2 **LIW Model Selection**

Press (**∗**,2,2) to select the Loss-In-Weight model. Setting the LIW Model to one of the 4 options will also set the parameters LLF (Loss in Weight Low Level Fill in grams) and HLF (Loss in Weight High Level Fill in grams). LIW

Model options are:

LIW05 (Sets LLF to 2500, HLF to 5000)
LIW10 (Sets LLF to 5000, HLF to 10000)
LIW25 (Sets LLF to 10000, HLF to 25000)
LIW40 (Sets LLF to 10000, HLF to 40000)

* 2 5

DISPLAY Firmware Status and Checksum

Press (*****,**2**,**5**) to display the Firmware status and checksum.
Displays the firmware status and checksum. When finished, press **Exit**, and then press **Exit** again to exit out of Program Mode.

* 4 5

SET MANUAL MODE PASSWORD

Press (*****,4,5, followed by a 5 digit number) to change the PASSWORD number for entering the MANUAL mode. The system is supplied with the number "11111" as the password number. If you wish to restrict use of this mode to only yourself, you may make up your own number and enter it here.

* 5 4

PRINTED REPORTS - Cycle-by-Cycle Printout

Press (*****,5,4) to set flag for a printout of data after each full dispense cycle. With this flag **ENABLED** and with a printer on line, four lines of information about the dispense cycle that just occurred will be sent to the printer. Press * to toggle between **ENABLED** and **DISABLED**. This information includes dispense weight and percentage of each component, the internal rate numbers used by the computer to determine dispense time, and the actual dispense time of each component. This is excellent information to track the accuracy of each dispense cycle and the accuracy of the entire system over an extended period of time. See: PRINTER OUTPUT for a more detailed explanation.

* 6 0

LIW COMMUNICATIONS – View the Blender's Ethernet IP Address, Subnet and Gateway

Note: this star function is available in controller software versions ending in /N

Press (*,6,0) to view the WSB's Ethernet IP Address, Subnet and Gateway. If the WSB is configured to obtain an IP automatically (DHCP) through *65, then the IP, Subnet will be whatever was assigned to the controller by a DHCP Server on your network. If the IP address was configured manually, this will be whatever was entered using *65. Press the * key to toggle through IP, Subnet and Gateway. Press EXIT when done.

* 6 2

LIW COMMUNICATIONS – View the Blender's Ethernet MAC Address

Note: this star function is available in controller software versions ending in /N

Press (*,6,2) to view the WSB's Ethernet MAC Address. View Only.

* 6 5

LIW COMMUNICATIONS – Set the Blender TCP/IP Settings (IP Address, Subnet Gateway)

Note: this star function is available in controller software versions ending in /N

Press (*,6,5) to configure Ethernet IP Address Settings. Under Static IP, you

may assign a static IP Address, Subnet and Gateway.

Press the **CE** key to toggle between DHCP and static IP Address.

> **Note:** If you plan to use DHCP be aware that software connecting to the Maguire Controller typically requires a known IP address that does not change, therefore your DHCP server will most likely need to maintain the same IP for the controller. To determine the controllers MAC address, see *62.

Using a Static IP Address - Press the **CE** key to toggle between DHCP and static IP Address. When the display toggles to Static IP, use the keypad to enter the static IP address you wish to assign the controller. Use leading zeros and press the * key for decimal. After entering the IP, the display will go to Network Mask (Subnet), the to Default Gateway. After entering the Default Gateway, the display will return to Static IP. When you are finished entering the network information, press exit to save settings and exit again to exit out of programming mode. MLAN and G2 communicate over TCP port 9999.

*** 6 6** **WSB COMMUNICATIONS – Sets the Blender ID number**

Press (*,6,6) to enter an identification number for this particular weigh scale blender. This I.D. number will appear on all printed reports. If you have more than one unit, this helps to identify reports. If you are using a computer to automatically gather data, then each controller must have a unique address. Valid numbers are 000 to 255. When connected to a computer, do not use the number 000 for identification.

*** 6 7** **MODBUS COMMUNICATIONS – Enable / Disable**

Press (*,6,7) to enable or disable Modbus communications. Press "*" to toggle between **ENABLED** and **DISABLED**. Press Exit when complete. **Modbus commands use TCP port 502.** The Modbus register map are available upon request or may be downloaded from our website.

*** 7 7** **Parameter Printout**

Press (*,7,7) to print a copy of all internal parameters. A printer must be connected and ready. Up to 13 lists will print, a General list and 12 component lists. Only components that are turned "on" will print. Four columns will print, RAM; ROM; 200 and 900 series tables; and EEPROM. Identifying headings print above each column.

*** 7 8** **Change Program Mode Password**

Press (*,7,8, followed by a 5 digit number) to change the PASSWORD number for entering the PROGRAM mode. The system is supplied with the number "22222" as the password number. If you wish to restrict use of this mode to only yourself, you may make up your own number and enter it here. If you forget your password number, call us. We can help.

*** 8 6** **Backdoor Password**

Press (*,8,6) to select a new "Back Door" password for your software. Display will say **BACKDOOR PASSWORD Select (0-9): 00000**. Enter 00001 up to 00009 to select one of nine new backdoor passwords. Contact us for the actual number. If you just want to kill the use of a backdoor password altogether, just enter a number from 1 to 9, and don't call us. Then no one in you plant will know the number. But we still will, just in case. Then your own selected regular password will work and as long as you don't forget it, your ok.

Controllers are pre-programmed with two normal passwords; (22222) is the default password for the PROGRAM mode, (11111) is the default password for the MANUAL mode. You can alter these passwords to any 5 digit number, but you must know the current PROGRAM password to change it. If for some reason the password has been altered and you can not remember it, we have a special "backdoor" password that will let you in no matter what. For obvious reasons, we do not provide that password in this manual. You must call us. However, there is a problem. If the wrong person in your factory obtains this password, then he will always have access to the Program mode of the blender no matter what.

Now, with this star function, you have the option to select from 10 different "backdoor" passwords. If your current "backdoor" password is known by the wrong person, you can call us for a new one.

To activate a new "backdoor" password, you will enter a number from 00000 to 00009 using this star function. Each number activates a different password. Entering 0 activates the current backdoor password, the one we have used for over 10 years. For a new one, call us and talk with someone you know here in the office and they will supply a number from 1 to 9, and the associated new "backdoor" password.

After this new "backdoor" password is selected, you can safely change the regular password to one only you know, and use that in normal production. No one will be able to use the backdoor to get in. If you forget your regular password, and you also forget which backdoor password you selected, then we will help you go through the entire list to find the one that works.

*** 8 9** **Select Weight Unit**

Press (*,8,9) to select the desired weight unit (GRAMS, KILOGRAMS, OUNCES, POUNDS) for readout of data. For the U.S.A. systems are supplied with POUND readout selected. KILOGRAMS are preferred for nearly all countries outside the U.S.A. GRAM or OUNCE readouts are appropriate only for very short runs or short demonstrations. Use the * key to toggle through the four possible selections. Press EXIT when the weight unit you want is displayed.

[*] [9] [3]

Update Controller Software From USB Drive

Press (*,9,3) to initiate a software update from the USB Drive. Pressing *,9,3 will cause the controller to search the USB drive for a folder named **maguire** and 3 files within the folder **maguire** named: **UPDATER.BIN**, **912WFxxxxx.crc**, and **912WFxxxxx.s28**. Updated software is available from Maguire Products free of charge and can be obtained by calling our office or visiting us on the web www.maguire.com.

[*] [9] [5]

SELECT COMM. SPEED (Set Baud Rate)

Press (*,9,5) to set the baud rate of the COM port. Options are 1200 baud or 2400 baud. Note: The default baud rate is 1200. If the baud rate is set to 2400, the G2-SA (if in use will also have to be set to 2400 baud by installing a jumper pin on an internal board. If you wish to do this, contact Maguire Products and request the document regarding the G2-SA baud rate. Document is also available online: www.maguire.com

[*] [9] [7]

USBC Driver Version

Press (*,9,7) to display the USBC Driver version. Press * to update the driver from the Flash drive. Press CE to verify the USB driver.

[*] [9] [8]

Display Load Cell Raw Signal (counts)

Press (*,9,8) to set flag for RAW-SIGNAL readout in place of gram readout of scale weight. Power-On will always set this flag to OFF. Use the * key to toggle flag ENABLE or DISABLE. Press EXIT when done. A raw signal readout is useful to demonstrate the extreme sensitivity of the load cells. The raw signal readout bypasses the calibration math routine. Load cell function can be monitored without concern for any improper weight calibration that may have been done.

[*] [9] [9]

Enable Weight Calibration of the Load Cells

Press (*,9,9) to set flag to enable Weight Calibration of the Load Cells. In later model controllers you can specify WSB CAL or LIW CAL. Power On will always set this flag to OFF. This flag must be ON before the load cell weight calibration keys, ZERO and FULL WT, will function. With ON flag displayed, press EXIT.

[*] [0] [0]

CLEAR ALL DATA

Press (*,0,0) to CLEAR ALL DATA fields. Press (*,0,0) to CLEAR ALL DATA fields. These are the material usage totals that are viewed with the VIEW key. If you are tracking material usage, you should record these numbers periodically but clearing these totals is entirely optional and not necessary.

After VIEWING the data or printing of data using the VIEW, * key sequence, a display of (00=CLEAR) will appear for 5 seconds. During the 5 seconds you may reset all data fields to zero by pressing 00. Pressing any other key or waiting 5 seconds will exit this sequence without clearing data.

Parameter List

Navigating Parameters

The First press of the PARA key will enter the GENERAL list at the top. Press the PARA key to move down in the list.

To change a displayed parameter enter a new number in place of the old one. CE will cancel a number entry before the last digit is entered. The purpose of each parameter is explained on the following pages.

EXIT will exit the sequence at any time.

Navigating Parameters Quickly - Keypad Sequence:

Press	PARA	To ENTER the list at the TOP LEFT (FLG)
Press	PARA	To move DOWN a list
Press	*	To move UP
Press	EXIT	When finished EXIT will take you out of Parameters

FLG	**Currently unavailable. For Future use.**
FUL	**Change only for extremely fluffy or heavy material** FUL is the full batch weight in GRAMS set at the factory by model number. This parameter should not be altered.

PRT	**Automatically print out of current LIW summary**
	
	When enabled a summary will be printed (appended) to the printer.txt file located on the flash drive. To enable enter a value in minutes (example: 00001 = 1 minute). The summary data included: current date and time, last printed summary, last date/time summary was cleared, LIW ID number, mode, current weight, current status, alarms, current voltage, target throughput, actual throughput, cycles (refills), grand total.
	
	`  DATE  TIME`
	`CURRENT  11/14/18  04:53:14`
	`LAST PRINTED  11/14/18  04:52:43`
	`LAST CLEARED  00/00/00  00:00:00`
	
	`LIW ID#  3  MODE: Extrusion`
	`CURRENT WEIGHT:  0 g (000000)`
	`STATUS:  UNLOCKED (FILLING)`
	`ALARM CODE: 28 -  NOT FILLING`
	`VOLTAGES:  XCV=00.00V`
	`TARGET WT/HR  5552.9  ACTUAL WT/HR  5575.4`
	`CYCLES  4`
	`TOTAL  345.1`
	`AMOUNTS ARE IN POUNDS`
	
	A new summary print is triggered by either time (minutes in PRT parameter) or a change to LIW status, change to target throughput or an alarm. A maguire folder must be present on a flash drive plugged into the controller.

LCL **LCH** **LCF** **LCZ**	**Load-cell parameters - DO NOT CHANGE THESE** These four parameters are set to match the characteristics of the type of load cells used in your system. DO NOT ALTER THEM. LCL and LCH are the acceptable LOW and HIGH limits of load cell output expressed as raw signal counts per gram of weight. LCF is the lowest acceptable FULL scale load cell output expressed as raw signal counts per second. LCZ is the highest acceptable ZERO scale output. LCF and LCZ values are multiplied by 256 before being used by the software.
SCR	**Special Customer Request** If a customer has a special software requirement that has no benefit to anyone else, then this request is hidden in the software and activated by the appropriate code number being entered into this parameter.
XCV **XRC**	**Extrusion Control Voltage** **XCV** - Extruder speed Control Voltage. This number can range from 0 to 1000 (XCV 00000) to XCV 01000), and indicates the voltage output from the XCD-X Extruder Drive Speed Control. In the UNLOCK mode, manual adjustments to the voltage are made by rotating the **ADJUST** pot on the XCD-X Extruder Drive Speed Control. These manual voltage adjustment update the XCV parameter. In the LOCK mode, the software control logic makes changes to this voltage, up or down, automatically by updating the XCV parameter. No direct adjustments should be made to this parameter. **XRC** - "Extruder speed Rate of Change", determines the ramp up or ramp down rate of the XCV parameter, above. It can range from 0 to 40 (XRC 00000) to (XRC 00040). Default setting is 00040. When XCV changes, it does so gradually, making small incremental changes every 10 interrupts, or about 24 incremental changes per second. The XRC parameter determines the maximum value of each incremental change. The default setting of 40 will produce a full range change from 0 to 10 volts over about 40 seconds.
TCV **TRC**	**Takeoff Control Voltage** These parameters control a second 0 to 10 volt voltage output on for controlling Takeoff control speed. They operate the same as the XCV and XRC covered above.
XAL	**Extrusion Control Adjustment Limit** XAL limits the degree of change that the software can make in one adjustment cycle. Default setting is 00005, 5 percent. Operator entered rate changes are not limited.

XUL	**Extrusion Control - Upper Adjustment Limit** XUL sets an upper limit to how far the software can adjust the extruder speed (control voltage) once in the LOCK mode. If while in LOCK mode this limit is exceeded, then the adjustment is NOT made, and the ALARM is turned on. If the alarm occurs, pressing the silence alarm button on the controller will quiet the alarm, however the alarm condition still exists. To reset the alarm you must UNLOCK the XCD-X Extruder Drive Speed Control by placing the switch in the manual position. Default is 00200, 2 volts. The idea is that once control is established, adjustments upward of more then 2 volts indicate conditions that should be attended to, a clogged screen pack for example. You may wish to reduce this number so that operators are warned well in advance of such conditions.
CPL	**Yield Control - Counts Per Linear unit of measure** Customers using Yield Control require a pulse generator, or shaft encoder, mounted on downstream takeoff equipment to signal the line speed to the blender. In operation the software displays GRAMS per unit length, which may be per foot, per yard, per meter, or whatever. For whichever unit length you select, enter the pulses per unit length in this parameter. In America, a typical shaft encoder delivers 600 or 1200 pulses per foot. Set the parameter to 600 or 1200. Everywhere else you are most likely concerned with meters. The proper setting for this parameter is then the number of pulses per METER that the encoder generates. The encoder we supply standard is a 600 pulses per revolution and the wheel is 1 foot in circumference. So the standard setting in AMERICA for CPL would be 600. If you used a 1 meter circumference wheel the setting would be 600. But the wheel we supply is 1 foot. So you have to calculate this per meter. 1 meter = 3.28 feet. This means the encoder wheel will have to turn 3.28 times to = 1 meter. 3.28 x 600 pulses = 1968. This is a theoretical setting. Once the line is up and running stable, take a couple of length samples (1 foot or 1 meter) and weigh them to compare what is on the display for gr/l. This should all be done while in the manual mode. If the actual gr/l length does not match the display gr/l then adjust the CPL value. Increasing the CPL value will increase the displayed gr/l and decreasing the CPL value will decrease the displayed gr/l.
PTD	**Yield Control - Pulse Train Delta, trip point** This allows some error in the pulse train rate. For example, if the pulses are being generated at a rate of 6030 per minute, which is 100.5 per second, and we count pulses every second, then we will count 100 for one second, 101 for the next, then 100, then 101 and so on. This "error" could cause adjustments to occur when no adjustment is warranted. The PTD parameter specifies how many over or under pulses have to accumulate before adjustment occurs. In the above example, if 6030 per minute was what we wanted, but counts came in at 101 per second, then an error of 30 would accumulate in 1 minute. The PTD parameter set to 00030 would cause a correction to occur at this level of error. The default value of this parameter is 00020 (20).

G2F	**Alarm status for G2 communications** Controller Alarms if the G2 software does not collect totals after a period of time (offline alarm).
XMO	**Maximum Extruder Output** For Extrusion Control, this parameter stores the extruder throughput rate that can be expected when control voltage is set to it's maximum output of 10 volts. On start up, before the unit has time to learn the correct voltage/throughput relationship, this parameter is used as a starting point. Having this value allows the customer to switch to Throughput mode right away. XMO is adjusted and corrected frequently by the software to match your process. The only time it is zero is on the very first start up of the system. XMO is the rate in pounds per hour, or kilos per hour.
LTP	**Loss In Weight Trip Point** For Extrusion Control, Yield Control, when a Loss In Weight station is part of the system, an adjustment "trip point" must be specified. This is the total accumulated error that is required to cause an adjustment to the learned rate. This is the equivalent to the XTP parameter, which is explained earlier. The last 3 digits are a percentage in tenths (xx.x) of the total batch that is being monitored. If the system is filling the Loss In Weight bin to a total weight of 10,000 grams, for example, and allowing it to drop to 5000 grams, for example, before refilling, then the batch is 5000 grams. If LTP is set to 00005, then this is .5 percent of 5000, or 25 gram trip point.
LLF	**Loss In Weight Low Level Fill** Value in grams that will cause the fill valve on the Loss In Weight system to open and begin to fill. This parameter is set automatically by the *22 LIW Model Selection.
HLF	**Loss In Weight High Level Fill** Value in grams that will cause the fill valve on the Loss In Weight system to close and stop the fill process. This parameter is set automatically by the *22 LIW Model Selection.
STL	**Settle Time** Delay time for material settling after tare and before weight readings are taken after refill. The delay time increases the time frame and weight value for the first weight reading thereby improving rate stability after a refill. The 1st 2 digits of the STL parameter are the delay time in seconds. The last two digits are for future use.
TMO	**Takeoff Maximum Output** - Reserved for future use.
NFA	**No Fill Alarm** This alarm is triggered after the weigh reading drops below the LLF parameter and the NFA delay time has elapsed without a refill. Last two digits are the alarm time delay in seconds. If the first digit is set to 1 and the alarm has been manually silenced, the alarm will reoccur after the no fill alarm time has elapsed. Default 00030 (30 seconds).

LFS	**Low Flow Stability** Second by second weight reading of the load cells to accumulate a steady rate of throughput. In applications with rates below 5 lbs/hr you may need to increase this value in seconds. Default 1 second weight sampling rate.
XOF	**Extruder Offset** Percentage offset of the throughput of the extruder to account for material not metered by the LIW. The percentage offset is added to the LIW's actual throughput that is displayed on the LIW controller and reported in "Get Steady State Rate". Percenteage in 100ths of a percent. Example XOF set to: 01000 = 10.00% Default is 00000.
XOD	**Extruder Offset Delay** Works with XOF. Delay in seconds after a change to XOF before making the offset change to the displayed throughput and the recalculated "Steady State Rate". Example: XOD set to 00060 = 60 seconds. Default is 00060

Alarm List

Max XCV

The MAX XCV alarm will occur in the locked mode if the calculated voltage exceeds 10.00 VDC at the extruder. After the occurrence of this alarm the system will automatically unlock and hold the last known voltage. To reset you must cycle the Manual / Lock switch.

Max TCV

The MAX TCV alarm will occur in the locked mode if the calculated voltage exceeds 10.00 VDC at the takeoff. After the occurrence of this alarm the system will automatically unlock and hold the last known voltage. To reset you must cycle the Manual / Lock switch.

Zero Weight

After calibrating the load cells, if the weight is ever less then zero this alarm will occur. This typically indicates that the weigh hopper is missing.

No Rate

The No Rate Alarm occurs in the locked mode when the controller fails to measure a loss in weight. This could be caused by a blockage at the throat.

No Pulse

The No Pulse alarm occurs if there is voltage on the takeoff pot but the controller fails to see pulses within one minute from the encoder mounted on the takeoff. This can be caused by faulty mounting of the encoder, a bad wire connection to the encoder, or a damaged encoder.

XUL Upper Limit

The XUL Upper Limit alarm occurs in locked mode if adjustments to the XCV (extruder voltage) exceed the locked voltage plus the voltage in the XUL parameter. This can be used to indicate that the extruder screen needs to be changed.

No Fill

The No Fill alarm occurs 30 seconds after the fill valve opens to fill. Set by the LLF. If after 30 seconds the HLF is not reached then the No Fill alarm sounds. This normally indicates no reserve above the Loss in Weight hopper.

Load Cell Zero Weight Calibration

This unit was properly calibrated for zero and full weight at the factory to match the load cells specific to the LIW model. It should not be necessary to re-calibrate during installation. Recommended calibration interval is about every 6 months of operation.

To zero the load cells, do the following:

BE SURE the weigh hopper is EMPTY.
BE SURE the load cell plug is plugged into the side of the controller.
BE SURE the weigh hopper is resting on the load cells freely.
BE SURE The load cells and weigh hopper are not jammed in any way. To test for this, press the CE key to display the raw load cell and grams of weight within the hopper. An empty hopper should display zero grams (to the upper-right of the display) and the raw load cell number (to the upper left of the display). While observing the grams in the upper-right of the display, apply pressure to the weigh hopper. The grams should increase when pressure is applied and decrease when pressure is removed. The display must return to exactly where it was, plus or minus 1 gram. Note: the pressing the CE will display the grams and raw count for 30 seconds before returning to the normal display.

If this does not happen, there is interference and the weigh hopper is not entirely free to move. Check EVERYTHING around the weigh hopper.

LOAD CELL CALIBRATION:
The sequence of keystrokes is as follows:

Load Cell Zero Calibration Keypad Sequence:

Press	*	Display will say: **ENTER PASSWORD**
Press	2 2 2 2 2	Display will say: **PROGRAM MODE, INSTRUCTION [ ]**
Press	* 9 9	Display will say: **CALIBRATION MODE DISABLED**
Press	*	Display will say: **CALIBRATION MODE, LIW LOAD CELLS**
Press	EXIT	Display will say: **PROGRAM**
Press	ZERO	Display will say: **LIW CELL ZERO -- WAIT --** Followed by: **SUCCESSFUL** The display will then show the **raw load cell count** and a gram weight of **0** After 30 second the display will return to **PROGRAM**
Press	EXIT	To exit program mode and return to normal operation

The ZERO point of the load cells is now set properly. FULL weight calibration may also be done at this time, however, it probably is NOT NECESSARY. When load cell readings shift due to rough handling, the entire range of readings from ZERO to FULL shift together. The ZERO weight calibration routine resets the full range of the cells and, therefore, corrects FULL weight readings as well. For information on FULL weight calibration, see the next page, RECALIBRATION OF LOAD CELLS.

Load Cell Full Weight Calibration

This unit was properly calibrated at the factory to match the load cells that were supplied with it. Before doing a Full Weight Calibration, you must first do a Zero Weight Calibration, (see previous section).

BE SURE you have a known calibration weight close to the full weight of your specific model. (LIW-5: 5000, LIW-10: 10000, LIW-25: 25000, LIW-40: 40000 grams).

Load Cell Full Weight Calibration - Keypad Sequence:

NOTE – This example is specific to a LIW series with a 10000 gram weigh bin – please check your model to select correct FULL weight.

Press	*	Display will say: **ENTER PASSWORD**
Press	2 2 2 2 2	Display will say: **PROGRAM**
Press	* 9 9	Display will say: **CALIBRATION MODE DISABLED**
Press	*	Display will say: **CALIBRATION MODE, LIW LOAD-CELLS**
Press	EXIT	Display will say: **PROGRAM**
Press	ZERO	Display will say: **LIW CELL ZERO -- WAIT --** Followed by: **SUCCESSFUL** The display will then show the **raw load cell count** and a gram weight of **0** After 30 second the display will return to **PROGRAM**

Place a 5000 or 10000, 25000 or 40000 Gram weight in the weigh hopper.

Press	FULL	Display will say: **LOAD CELL FULL, Enter Weight: _ _ _ _ _**

If YOUR weight is not exactly 10000 grams, then enter the ACTUAL weight that YOU are using.

Enter Weight: <u>09112</u> (example using a 9112 gram weight for a LIW-10, 10000 gram model)

Display will say: LOAD CELL FULL, -- WAIT --

Display will say: **9112 g** (or whatever <u>your</u> calibration weight is)

The display will then show the **raw load cell count** and the actual gram weight

After 30 second the display will return to **PROGRAM**

Remove weights from weigh hopper		Display will say: program
Press	EXIT	to exit out of program mode and resume normal operation.

Updating Controller Firmware

USB Drive Update

1. Updating firmware uses a standard USB drive. There are 3 files that are required to perform a software update to the LIW Controller. These files may be requested from Maguire Products and are labeled:

   `UPDATER.BIN`
   `912WFxxx.crc`
   `912WFxxx.s28`

   When you are provided with these three files, they should be copied to a USB drive and placed in a folder named: **Maguire**

2. Insert the USB drive into the USB port on the LIW controller. Note, the controller should be powered on but should not be running cycles.

3. Enter into program mode. Press ✱22222

4. Press ✱93. The display should say **Checking Device…**

5. If more than one firmware version is stored on the flash drive, Press ✱ to toggle between firmware versions. If you only have a single copy of firmware stored on the flash drive the controller will default to displaying that version.

   Select Version:
   WFxxxxx

6. When the firmware to loaded is displayed, press the **CE** key to begin the firmware transfer.

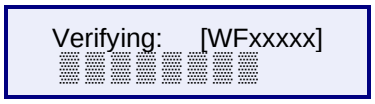

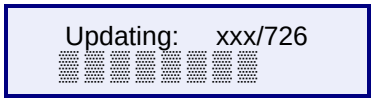

IMPORTANT!

Do not turn off controller or remove the flash drive while firmware is updating! Doing so may corrupt the controller's firmware.

7. When **Update Complete!** is displayed, turn off the controller and turn on again. **Clear All** will display if a version update was applied. The firmware update to the controller is complete.

Firmware Naming Scheme

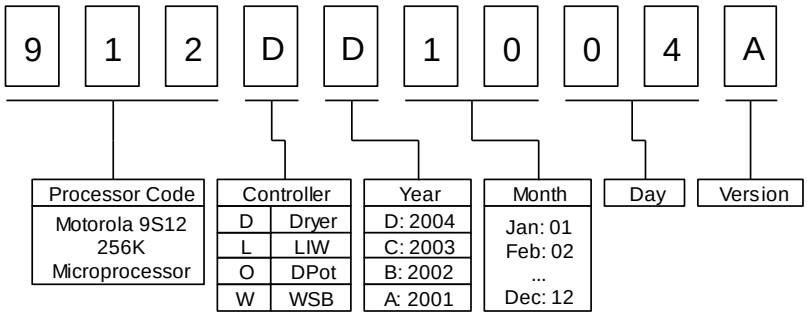

LIW Model Specifications and Dimension Drawings

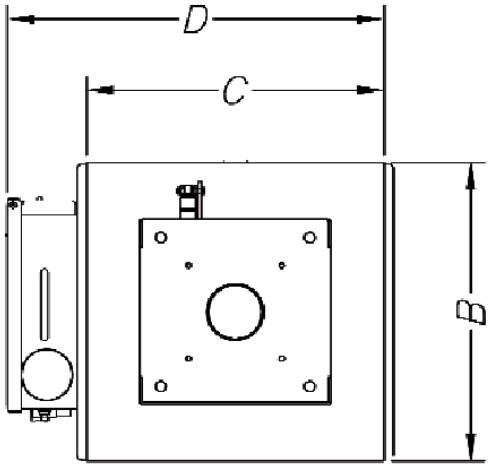

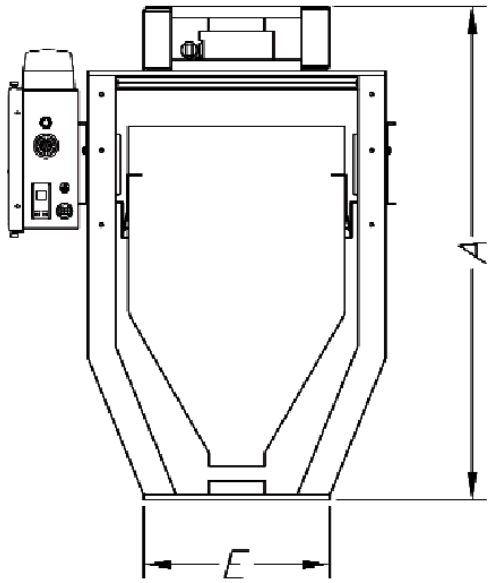

Model	Capacity cu.ft. (liters)	Throughput Range Lb/hr (kg/hr)	Dimensions – inches (mm)					Weight lbs. (kg)
			A	B	C	D	E	
LIW-05	0.3 (8.5)	5 - 300 (2.2 – 136)	23.5 (596.9)	12.0 (304.8)	14.2 (360.7)	18.2 (462.3)	6.0 x 6.0 (152.4)	56 (25.5)
LIW-10	0.6 (17.0)	100 - 600 (45 - 272)	26.5 (673.1)	17.7 (449.1)	16.0 (406.4)	20.0 (508.0)	10.0 x 10.0 (254.0)	74 (33.6)
LIW-25	1.6 (45.3)	500 - 1500 (228 - 682)	34.5 (876.3)	17.7 (449.1)	22.0 (558.8)	26.0 (660.4)	10.0 x 10.0 (254.0)	120 (54.6)
LIW-40	2.5 (70.8)	1000 - 3000 (454 - 1364)	41.5 (1054.1)	23.7 (602.0)	22.0 (558.8)	26.0 (660.4)	10.0 x 10.0 (254.0)	140 (63.6)

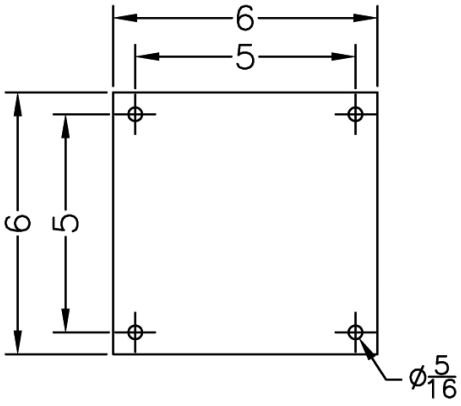

LIW-5 footprint

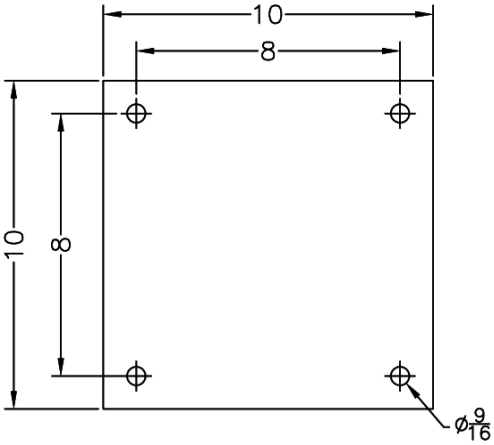

LIW 10, LIW 25, LIW 40 footprint

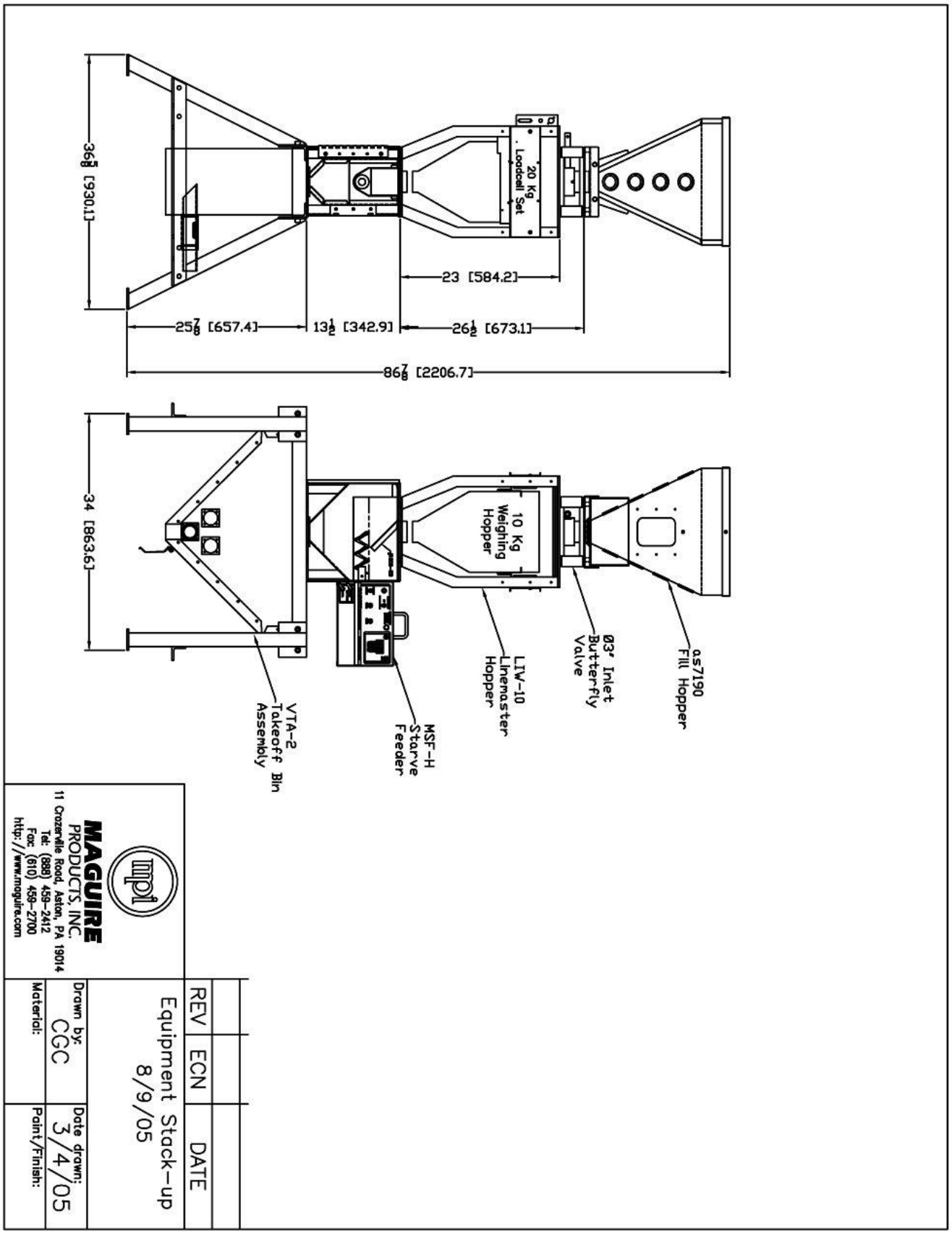
as7190
Fill Hopper
03" Inlet
Butterfly
Valve
LIW-10
Linemaster
Hopper
10 Kg
Weighing
Hopper
MSF-H
Starve
Feeder
VTA-2
Takeoff Bin
Assembly
20 Kg
Loadcell Set
23 [584.2]
26½ [673.1]
13½ [342.9]
25⅞ [657.4]
86⅞ [2206.7]
36⅝ [930.1]
34 [863.6]
MAGUIRE
PRODUCTS, INC.
11 Crozerville Road, Aston, PA 19014
Tel: (888) 459-2412
Fax: (610) 459-2700
http://www.maguire.com
REV
ECN
DATE
Equipment Stack-up
8/9/05
Drawn by:
CGC
Date drawn:
3/4/05
Material:
Paint/Finish:

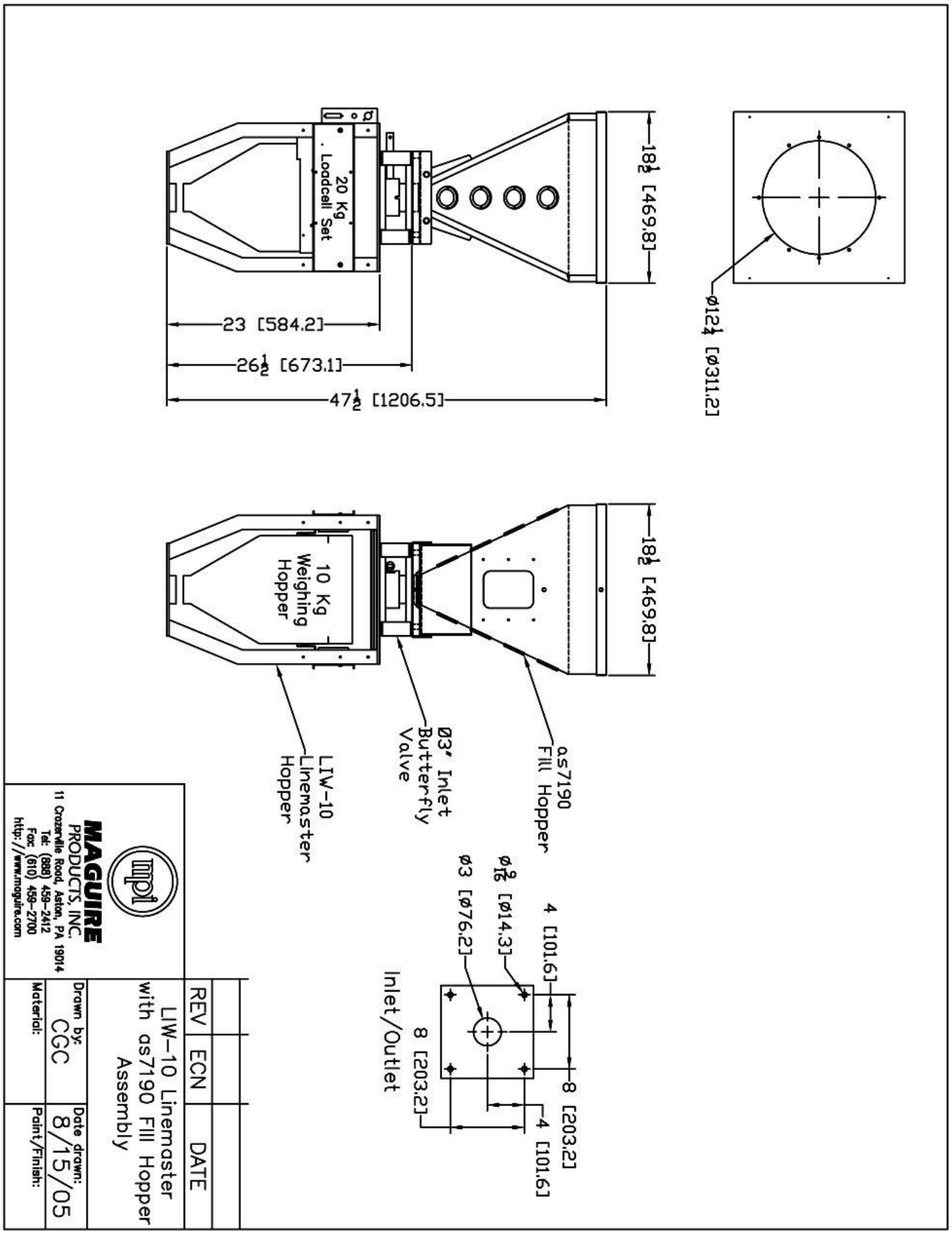
ø12¼ [ø311.2]
18½ [469.8]
20 Kg Loadcell Set
23 [584.2]
26½ [673.1]
47½ [1206.5]
18½ [469.8]
as7190 Fill Hopper
Ø3" Inlet Butterfly Valve
10 Kg Weighing Hopper
LIW-10 Linemaster Hopper
4 [101.6]
ø9/16 [ø14.3]
ø3 [ø76.2]
8 [203.2]
4 [101.6]
8 [203.2]
Inlet/Outlet
MAGUIRE
PRODUCTS, INC.
11 Crozerville Road, Aston, PA 19014
Tel: (888) 459-2412
Fax: (610) 459-2700
http://www.maguire.com
REV
ECN
DATE
LIW-10 Linemaster
with as7190 Fill Hopper
Assembly
Drawn by:
CGC
Date drawn:
8/15/05
Material:
Paint/Finish:

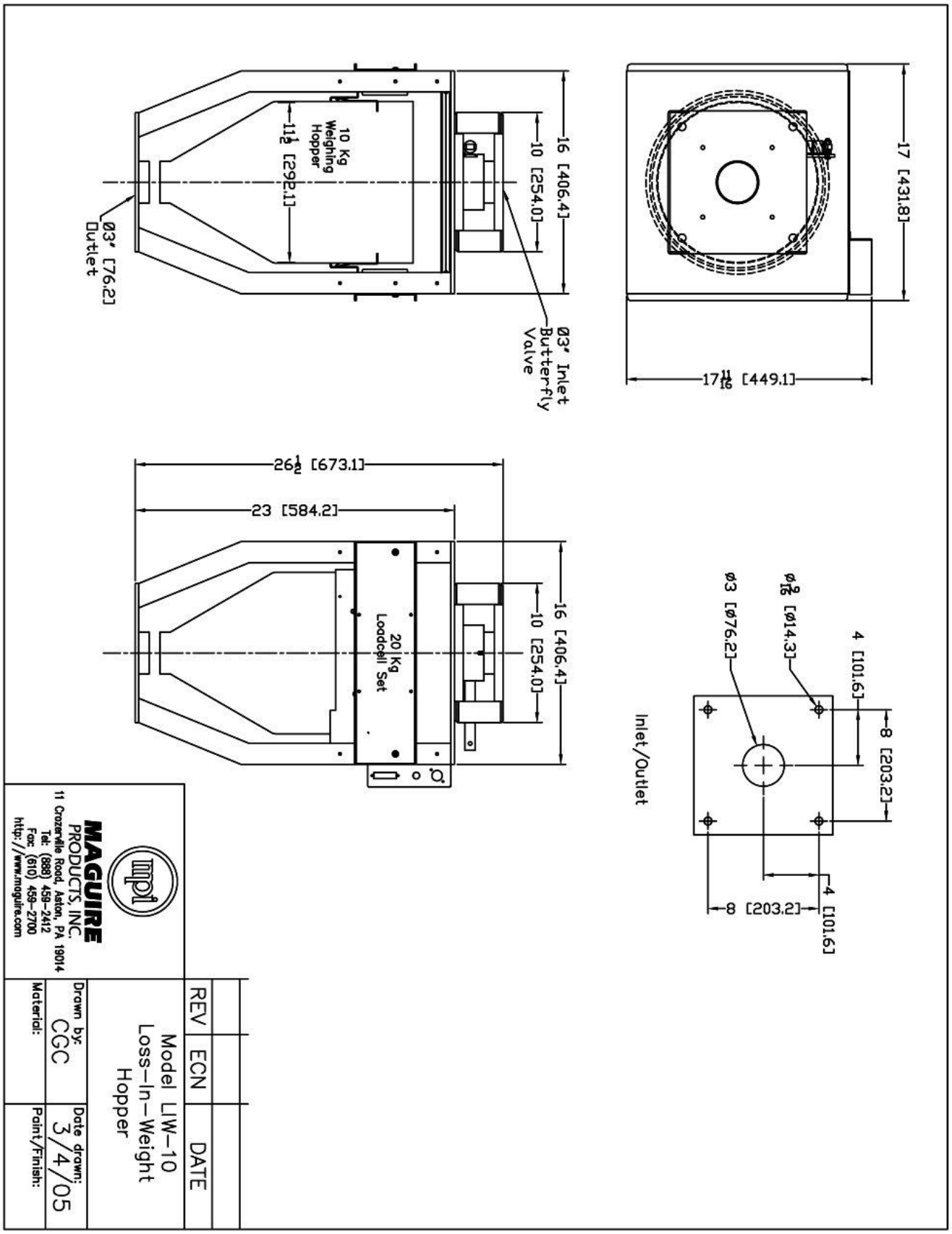
17 [431.8]
17 11/16 [449.1]
16 [406.4]
10 [254.0]
Ø3" Inlet Butterfly Valve
10 Kg Weighing Hopper
11 1/2 [292.1]
Ø3" [76.2] Outlet
26 1/2 [673.1]
23 [584.2]
20 Kg Loadcell Set
Inlet/Outlet
4 [101.6]
8 [203.2]
Ø9/16 [Ø14.3]
Ø3 [Ø76.2]
MAGUIRE PRODUCTS, INC.
11 Crozerville Road, Aston, PA 19014
Tel: (888) 459-2412
Fax: (610) 459-2700
http://www.maguire.com
REV
ECN
DATE
Model LIW-10
Loss-In-Weight
Hopper
Drawn by: CGC
Date drawn: 3/4/05
Material:
Paint/Finish:

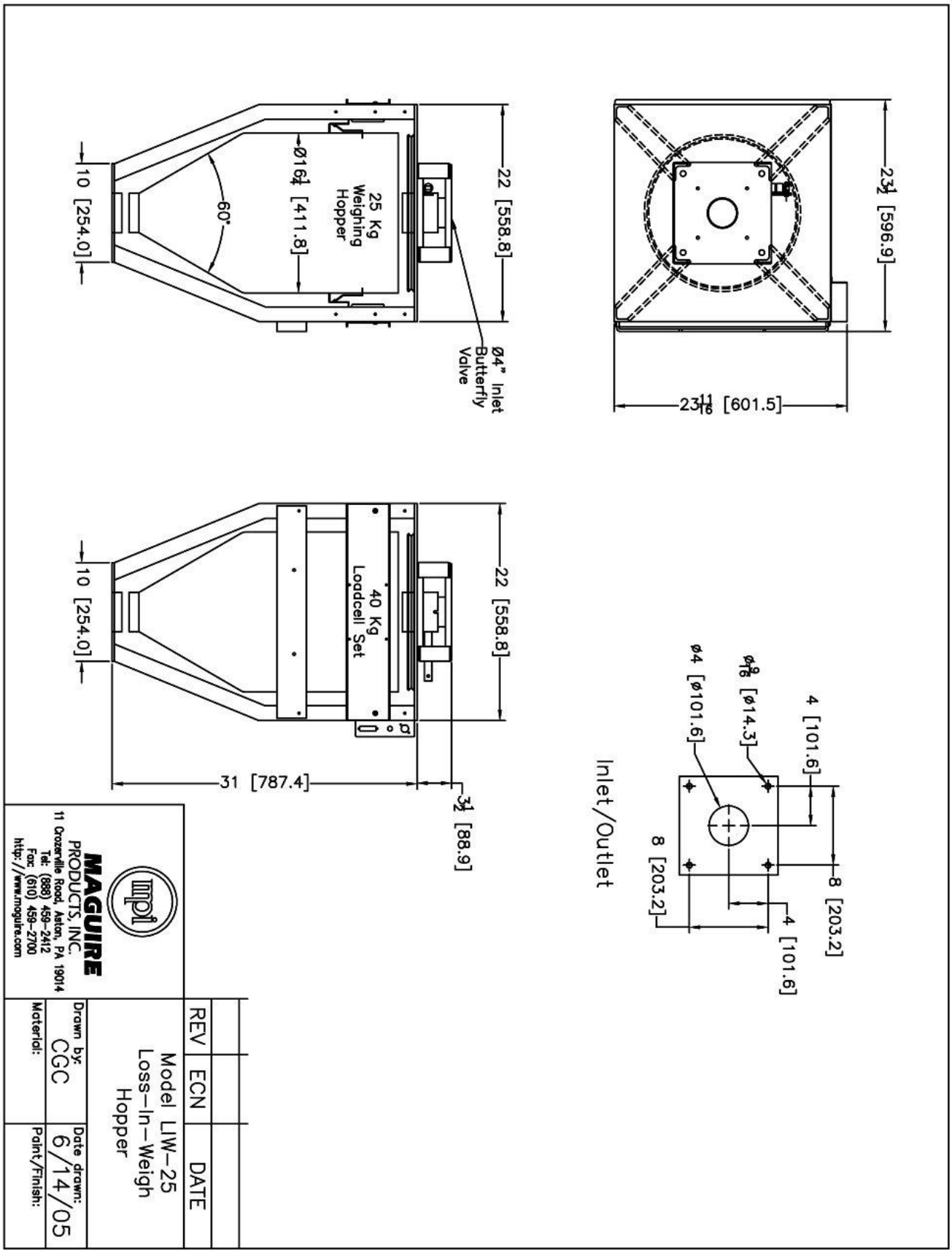
23½ [596.9]
23 11/16 [601.5]
22 [558.8]
Ø4" Inlet Butterfly Valve
25 Kg Weighing Hopper
Ø16¼ [411.8]
60°
10 [254.0]
22 [558.8]
40 Kg Loadcell Set
31 [787.4]
3½ [88.9]
10 [254.0]
4 [101.6]
8 [203.2]
Ø9/16 [Ø14.3]
Ø4 [Ø101.6]
4 [101.6]
8 [203.2]
Inlet/Outlet
MAGUIRE PRODUCTS, INC.
11 Crozerville Road, Aston, PA 19014
Tel: (888) 459-2412
Fax: (610) 459-2700
http://www.maguire.com
REV
ECN
DATE
Model LIW-25
Loss-In-Weigh
Hopper
Drawn by: CGC
Date drawn: 6/14/05
Material:
Paint/Finish:

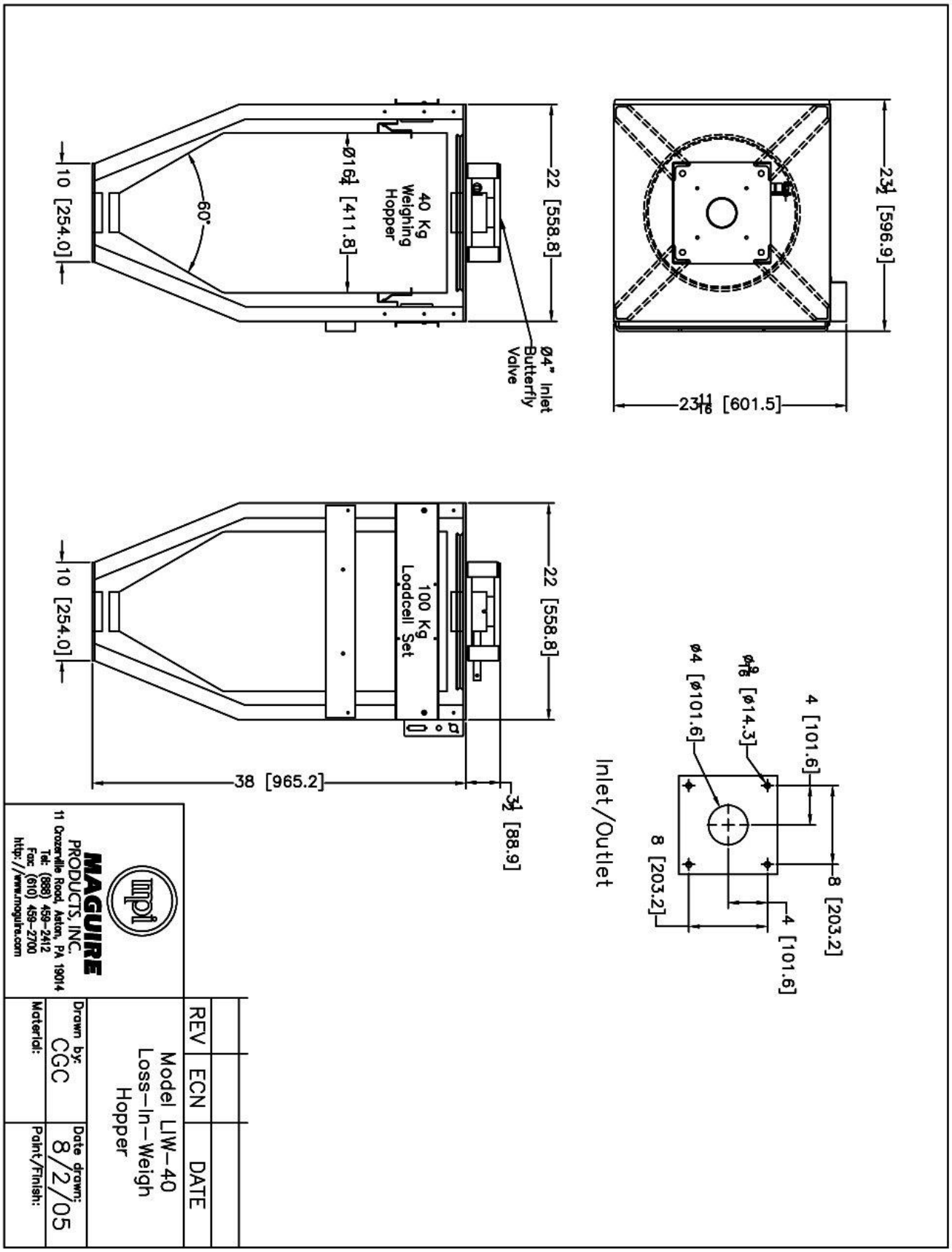
23½ [596.9]
23 11/16 [601.5]
22 [558.8]
Ø4" Inlet Butterfly Valve
40 Kg Weighing Hopper
Ø16¼ [411.8]
60°
10 [254.0]
100 Kg Loadcell Set
38 [965.2]
3½ [88.9]
4 [101.6]
8 [203.2]
Ø9/16 [Ø14.3]
Ø4 [Ø101.6]
Inlet/Outlet
MAGUIRE PRODUCTS, INC.
11 Crozerville Road, Aston, PA 19014
Tel: (888) 459-2412
Fax: (610) 459-2700
http://www.maguire.com
REV
ECN
DATE
Model LIW-40
Loss-In-Weigh
Hopper
Drawn by: CGC
Date drawn: 8/2/05
Material:
Paint/Finish:

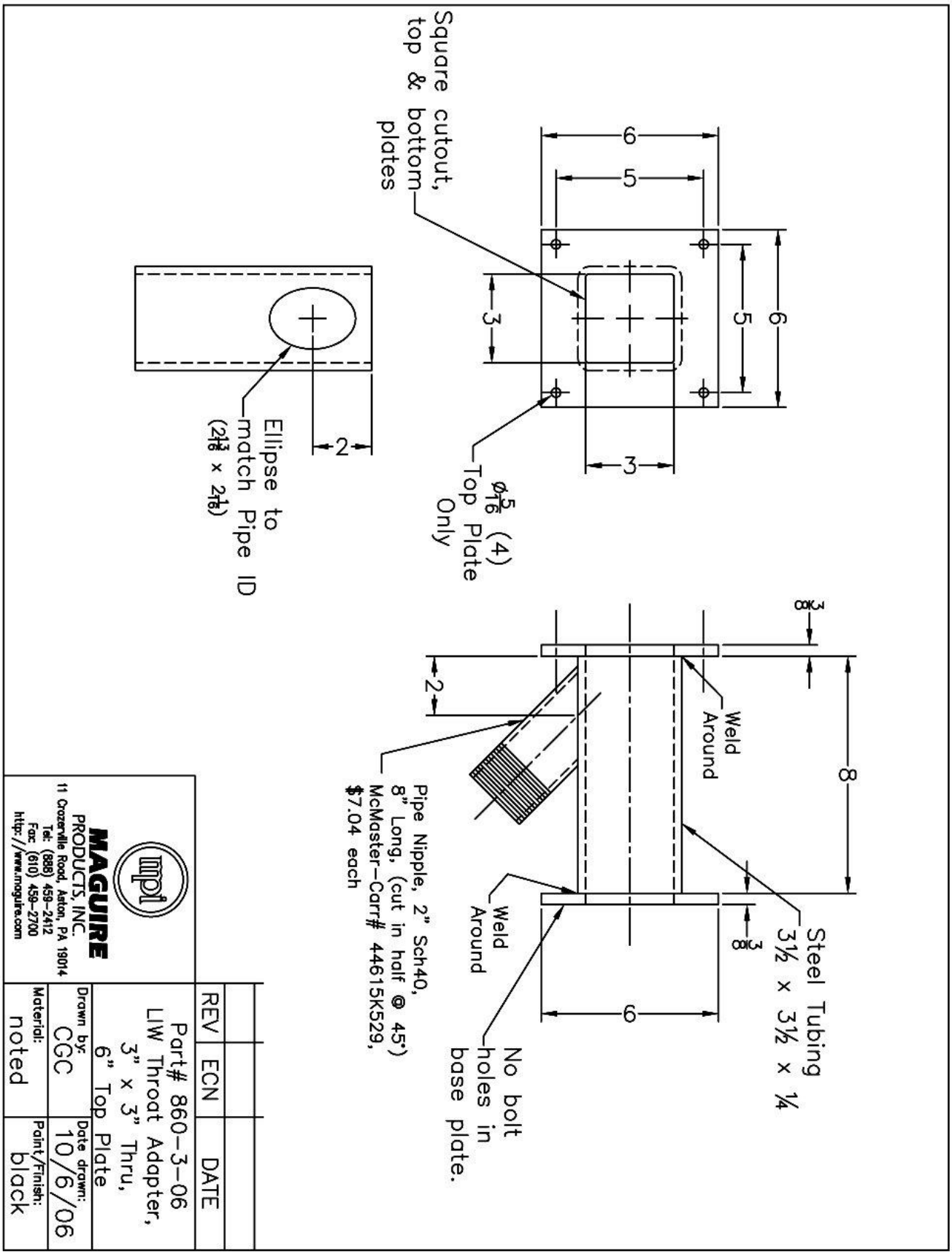
Square cutout, top & bottom plates
6
5
5
6
3
3
Ø5/16 (4) Top Plate Only
Ellipse to match Pipe ID (2 13/16 x 2 1/16)
2
3/8
8
Weld Around
Steel Tubing 3½ x 3½ x ¼
3/8
2
6
Weld Around
No bolt holes in base plate.
Pipe Nipple, 2" Sch40, 8" Long, (cut in half @ 45°) McMaster-Carr# 44615K529, $7.04 each
MAGUIRE PRODUCTS, INC.
11 Crozerville Road, Aston, PA 19014
Tel: (888) 459-2412
Fax: (610) 459-2700
http://www.maguire.com
REV
ECN
DATE
Part# 860-3-06
LIW Throat Adapter, 3" x 3" Thru, 6" Top Plate
Drawn by: CGC
Date drawn: 10/6/06
Material: noted
Paint/Finish: black

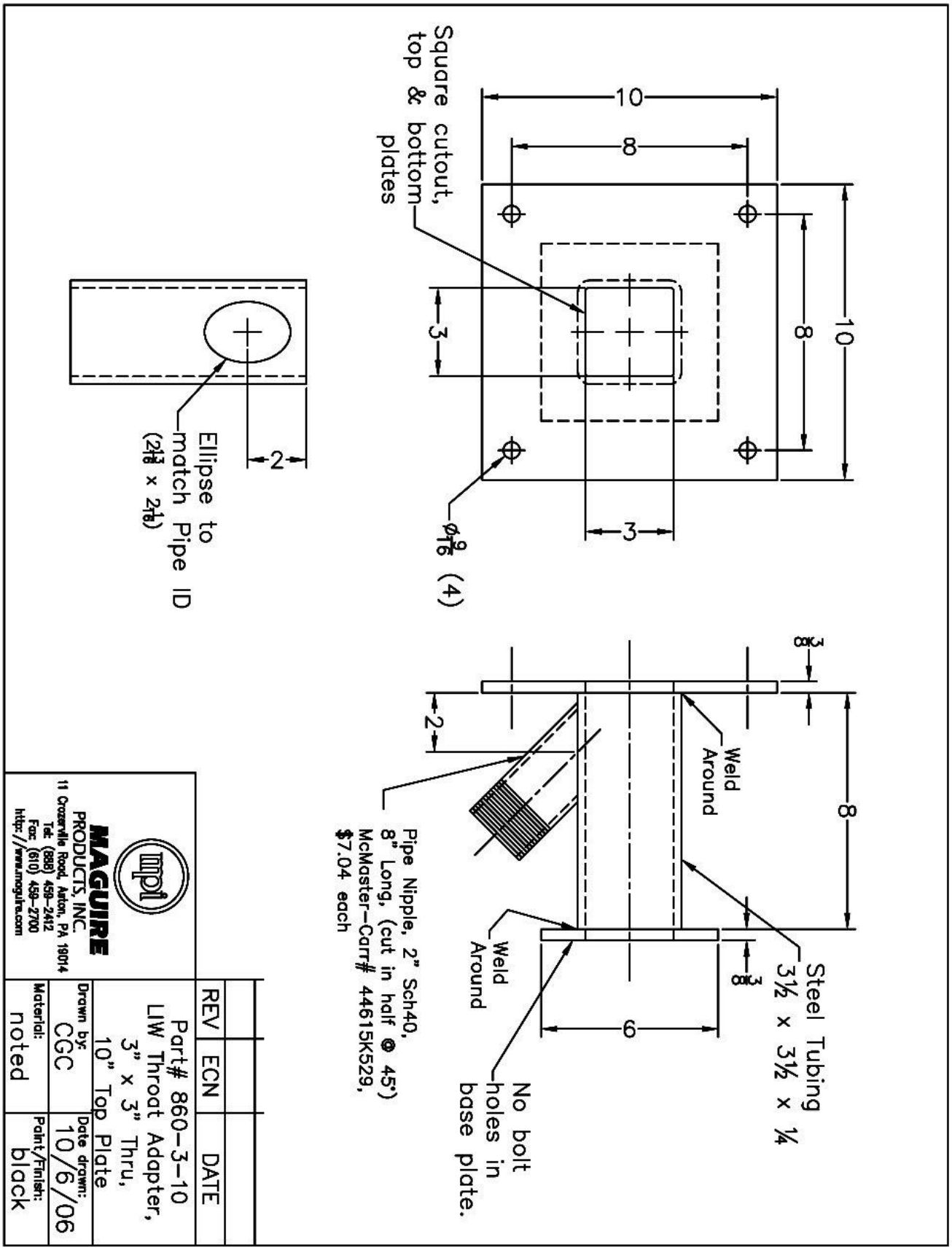
10
8
10
8
Square cutout, top & bottom plates
3
3
Ø9/16 (4)
Ellipse to match Pipe ID (2 13/16 x 2 1/16)
2
3/8
Weld Around
8
Steel Tubing 3½ x 3½ x ¼
2
3/8
6
Weld Around
No bolt holes in base plate.
Pipe Nipple, 2" Sch40, 8" Long, (cut in half @ 45°) McMaster-Carr# 44615K529, $7.04 each
MAGUIRE PRODUCTS, INC.
11 Crozerville Road, Aston, PA 19014
Tel: (888) 459-2412
Fax: (610) 459-2700
http://www.maguire.com
REV
ECN
DATE
Part# 860-3-10
LIW Throat Adapter,
3" x 3" Thru,
10" Top Plate
Drawn by: CGC
Date drawn: 10/6/06
Material: noted
Paint/Finish: black

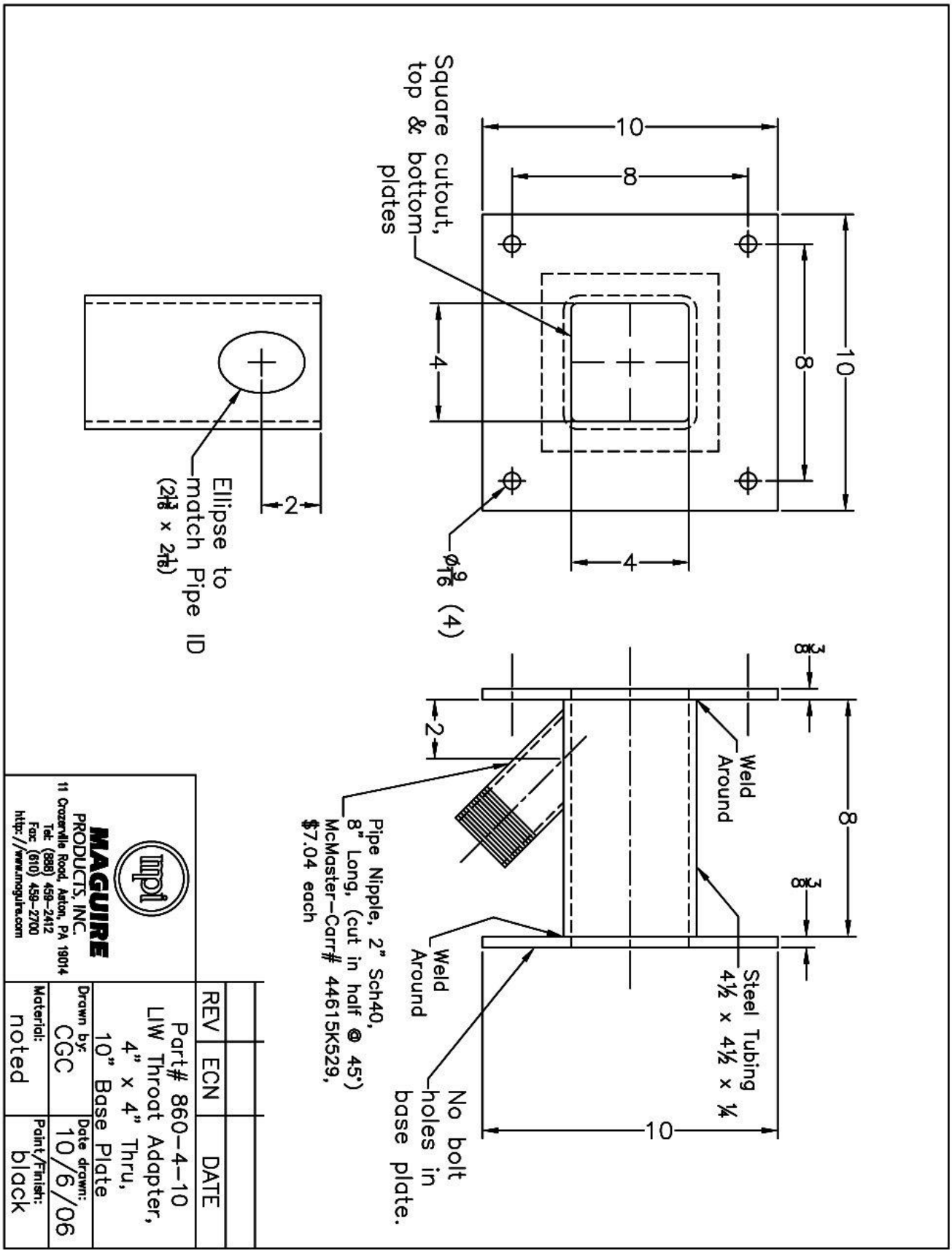
10
8
Square cutout, top & bottom plates
10
8
4
4
Ø9/16 (4)
Ellipse to match Pipe ID (2 13/16 x 2 1/16)
2
3
Weld Around
8
3
2
Pipe Nipple, 2" Sch40, 8" Long, (cut in half @ 45°) McMaster-Carr# 44615K529, $7.04 each
Weld Around
Steel Tubing 4½ x 4½ x ¼
No bolt holes in base plate.
10
MAGUIRE PRODUCTS, INC.
11 Crozerville Road, Aston, PA 19014
Tel: (888) 459-2412
Fax: (610) 459-2700
http://www.maguire.com
REV
ECN
DATE
Part# 860-4-10
LIW Throat Adapter,
4" x 4" Thru,
10" Base Plate
Drawn by: CGC
Date drawn: 10/6/06
Material: noted
Paint/Finish: black

Warranty – Exclusive 5-Year

MAGUIRE PRODUCTS offers **THE MOST COMPREHENSIVE WARRANTY** in the plastics auxiliary equipment industry. We warrant each product to be free from defects in material and workmanship for 5 years from the date of delivery. In addition, we are committed to satisfying our customers in whatever manner is deemed most expedient to overcome any problems they may have in connection with Maguire equipment.

Technical Support and Contact Information

Maguire Products Inc.
11 Crozerville Road
Aston, PA 19014
Tel: 610.459.4300
Fax: 610.459.2700
Email: info@maguire.com
Web: www.maguire.com

Maguire Europe
Tame Park
Tamworth
Staffordshire
B775DY
UK
Tel: + 44 1827 265 850
Fax: + 44 1827 265 855
Email: info@maguire-europe.com

Maguire Products Asia PTE LTD
45 Kallang Pudding Road
#01-02 Alpha Building
Singapore 349317
Tel: +65 6848 7117
Fax: +65 6744 3370
Email: magasia@maguire-products.com.sg